NOMINAL CAPACITY RATINGS

TABLE: 1

MODEL	NOMINAL CFM	8 FIN PER INCH.										
		COOLING CAPACITY M.B.H					HEATING CAPACITY M.B.H					
		CHILLED WATER			D.X. COIL		HOT WATER				STEAM	
		4 ROW	6 ROW	8 ROW	4 ROW	6 ROW	1 ROW	2 ROW	3 ROW	4 ROW	1 ROW	2 ROW
250	2500	86	108	122	79	100	70	115	170	210	136	240
350	3500	128	162	184	115	145	105	180	260	310	202	365
500	5000	171	216	244	157	200	140	245	350	420	270	490
700	7000	244	304	342	211	270	200	340	490	600	375	680
1000	10000	345	430	486	317	405	280	485	700	850	535	980
1500	15000	530	660	745	475	615	440	770	1110	1330	805	1470
2200	22000	825	1025	1160	700	910	600	1050	1600	1800	1190	2160
2500	25000	855	1065	1205	781	995	700	1200	1700	2100	1330	2470
3000	30000	1034	1290	1460	913	1160	840	1460	2100	2540	1620	3000
4000	40000	1390	1730	1965	1215	1540	1240	2110	2800	3450	2120	4010

TABLE: 1 (CONT.)

MODEL	NOMINAL CFM	14 FIN PER INCH.										
		COOLING CAPACITY M.B.H					HEATING CAPACITY M.B.H					
		CHILLED WATER			D.X. COIL		HOT WATER				STEAM	
		4 ROW	6 ROW	8 ROW	4 ROW	6 ROW	1 ROW	2 ROW	3 ROW	4 ROW	1 ROW	2 ROW
250	2500	113	142	161	91	116	108	161	221	250	163	288
350	3500	169	210	242	132	168	160	240	330	375	242	438
500	5000	225	285	322	180	230	215	343	455	525	324	588
700	7000	322	401	451	243	310	308	476	637	755	450	816
1000	10000	455	567	642	365	466	431	679	910	1095	642	1176
1500	15000	699	871	983	547	700	677	1020	1370	1681	966	1764
2200	22000	1089	1333	1462	806	1030	924	1470	2010	2486	1428	2592
2500	25000	1128	1405	1590	899	1146	1078	1680	2260	2822	1596	2984
3000	30000	1364	1702	1927	1051	1340	1293	2044	2730	3376	1944	3600
4000	40000	1834	2283	2593	1399	1784	1795	2800	3640	4478	2544	4812

NOTES:

1- M.B.H = 1000 BTU/hr

2-ALL CAPACITIES ARE BASED ON THE FLLOWING CONDITIONS:

COOLING - ENTERING AIR 80°F D.B.,67°F W.B.. CHILLED WATER ENTERING COIL AT 45°F AND LEAVING AT 55°F

HEATING - ENTERING AIR 60°F HOT WATER ENTERING COIL AT 180°F AND LEAVING AT 160°F AND STEAM

RATINGS BASED ON STEAM PRESSURE OF 5 PSIG.

FOR DESIGN CONDITIONS OTHER THAN THE ABOVE . REFER TO TABLES 8,9,10,11.

FILTER AIR PRESSURE DROP

TABLE: 2

FILTERS	FACE VELOCITY F.P.M.									
	300	350	400	450	500	550	600	650	700	800
CLEANABLE	0.037	0.050	0.065	0.081	0.099	0.120	0.156	0.182	0.235	0.325

COIL AIR PRESSURE DROP

TABLE: 3

NUMBER OF ROWS	FACE VELOCITY F.P.M.									
	300		400		500		600		700	800
	DRY	WET	DRY	WET	DRY	WET	DRY	WET	DRY	WET
1	0.047	0.065	0.075	0.104	0.108	0.147	0.147	0.192	0.188	0.238
2	0.096	0.136	0.156	0.208	0.221	0.292	0.300	0.383	0.390	0.481
3	0.123	0.205	0.200	0.312	0.286	0.440	0.390	0.576	0.500	0.631
4	0.150	0.273	0.240	0.416	0.351	0.585	0.481	0.767	0.611	0.780
5	0.195	0.338	0.296	0.520	0.435	0.734	0.600	0.955	0.767	0.975
6	0.234	0.403	0.351	0.624	0.520	0.884	0.715	1.144	0.923	1.170
8	0.300	0.533	0.481	0.845	0.715	1.131	0.950	1.530	1.235	1.560

NOTE:

1- ALL PRESSURE DROP IN INCH OF WATER.

2- ALL SPECIFICATIONS SUBJECT TO CHANGE WITHOUT NOTICE.

ACCESSORIES AIR SIDE PRESSURE DROP (IN.W.G)

TABLE: 4 (AT 500 FPM VELOCITY)

MODEL	DIFFUSER	AIR WASHER CLASS 4	AIR WASHER CLASS 6.8	FACE & BYPASS DAMPER	DAMPER	MIXING BOX WITHOUT FILTER
250 - 1000	0.03	0.22	0.35	0.20	0.02	0.06
1500 - 4000	0.04	0.25	0.40	0.25		

VELOCITY CORRECTION FACTOR

TABLE: 5

COIL FACE VELOCITY	350	400	450	500	550	600	700	800
COOLING COIL	0.8	0.88	0.94	1.0	1.05	1.11	1.19	1.28
HEATING COIL	0.86	0.92	0.96	1.0	1.03	1.06	1.11	1.15

CHILLED WATER COIL CORRECTION FACTOR

TABLE: 6

E.W.B. (°F)	CHILLED WATER TEMP.		
	42	44	46
67	1.12	1.04	0.96
72	1.37	1.29	1.21
75	1.52	1.44	1.36

STEAM CORRECTION FACTOR

TABLE: 7

E.D.B. (°F)	STEAM PRESSURE (PSIG)		
	15	30	60
-15	1.10	1.20	1.32
10	1.11	1.22	1.37
35	1.12	1.25	1.44
60	1.15	1.30	1.49

DIMENSIONS

(HORIZONTAL)

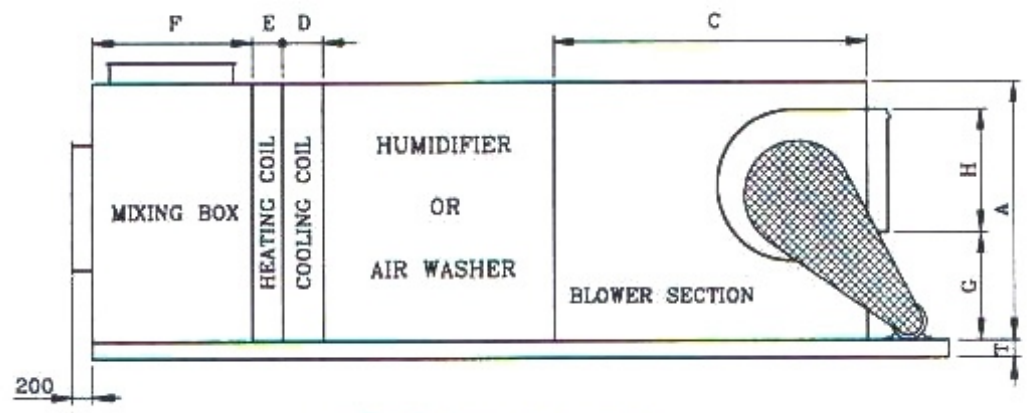

SIDE ELEVATION

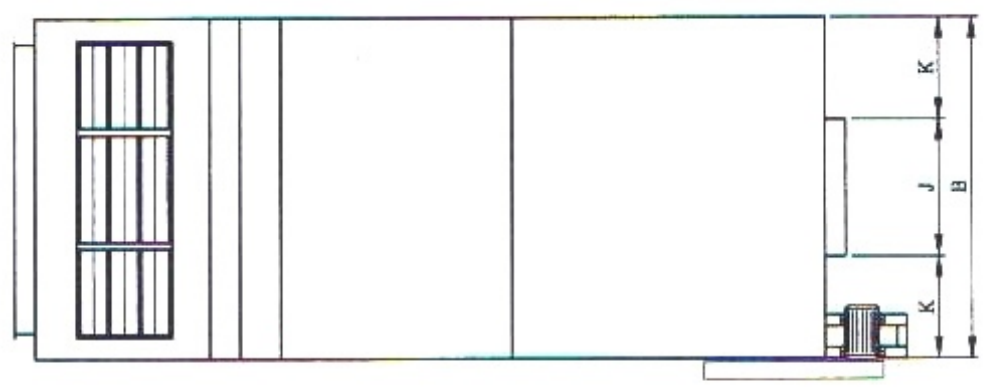

TOP ELEVATION

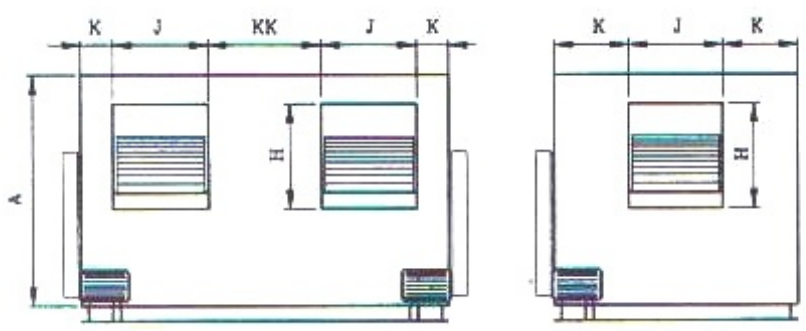

FRONT ELEVATION

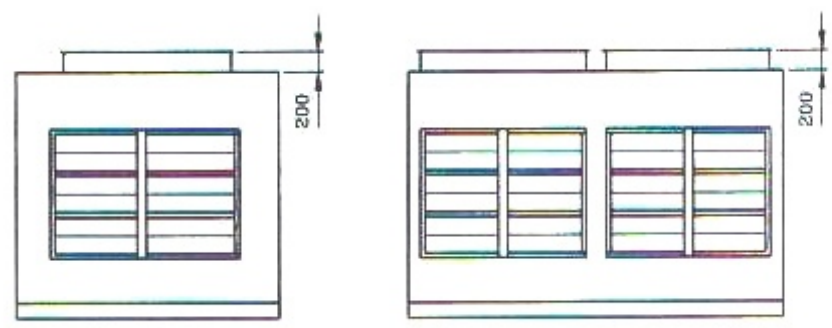

BACK ELEVATION

DIMENSIONS

MODEL	A	B	C	D	E	F	G	H	J	K	KK	T
250	850	1110	1000	No. OF ROWS	COIL WIDTH	620	350	470	475	317	---	100
350	950	1110	1100			620	350	520	475	317	---	100
500	1080	1460	1200	1	100	750	400	570	500	480	---	100
700	1180	1460	1300	2	150	880	400	675	575	442	---	100
1000	1400	1810	1500	3	180	1000	500	730	645	582	---	100
1500	1520	2160	1700	4	200	1200	600	830	745	707	---	120
2200	1820	2520	1800	6	280	1300	600	840	910	805	---	120
2500	1520	3620	1500	8	330	1000	500	730	646	582	1165	120
3000	1520	4320	1700			1200	600	830	745	707	1415	140
4000	1820	5020	1800			1300	600	840	910	800	1600	140

NOTES:

1- ALL DIMENSIONS IN MM.

2- ALL PARAMETERS EXCEPT A,B AND F FOR THE HIGH PRESSURE DISCHARGE (HP) SERIES MAY VARY BASED ON SIZE OF FAN (S) CHOSEN.

DIMENSIONS

(VERTICAL)

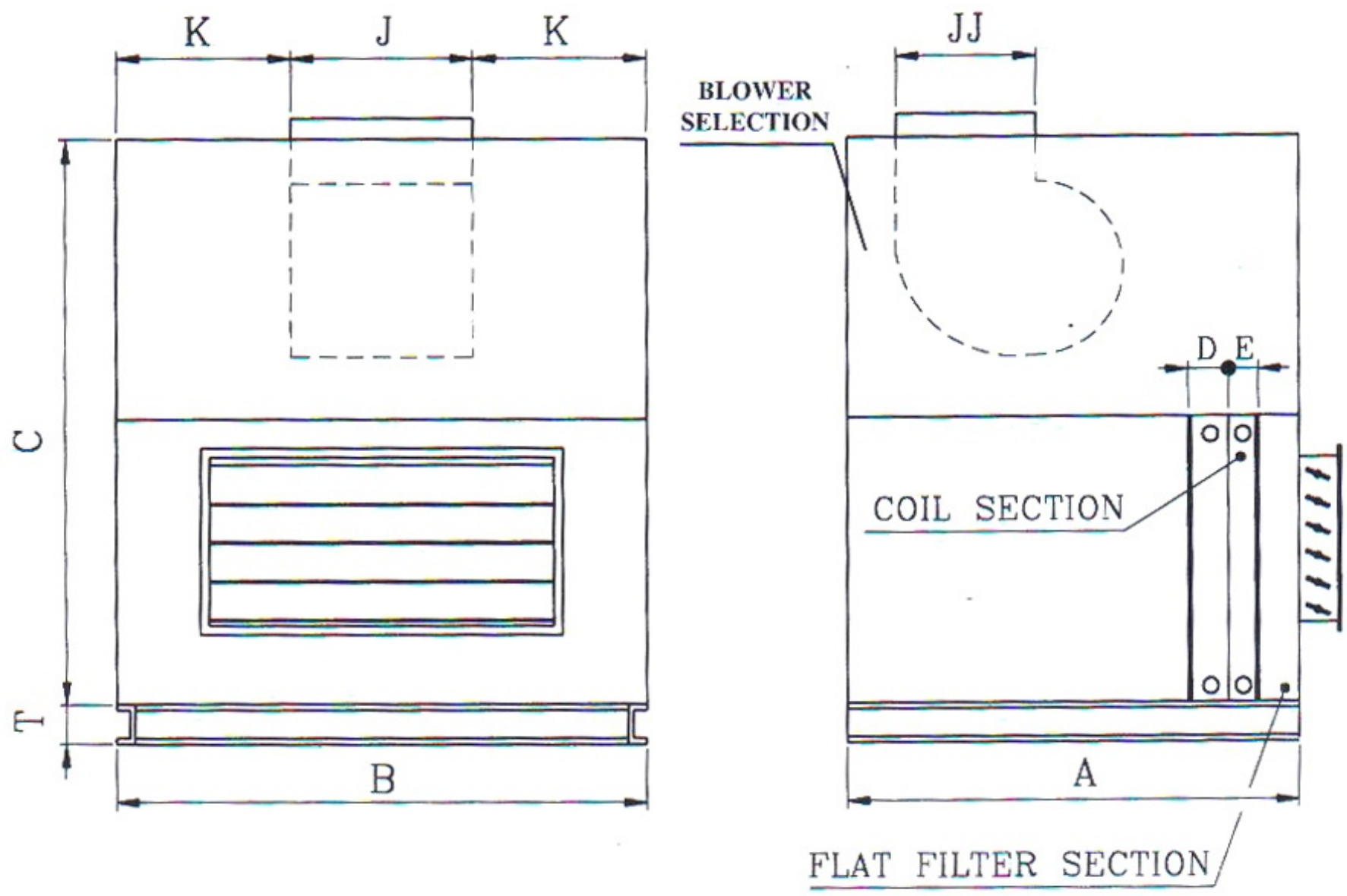

DIMENSIONS

MODEL	A	B	C	D	E	J	JJ	K	T
250	900	1110	1380	No. OF ROWS	COIL WIDTH	475	470	317	100
350	900	1110	1700	1	100	475	520	317	100
500	1000	1460	1750	2	150	500	570	480	100
700	1000	1460	2100	3	180	575	675	442	100
1000	1200	1810	2250	4	200	645	730	582	100
1500	1300	2160	2850	6	280	745	830	707	120
				8	330				

NOTES:

1- ALL DIMENSIONS IN MM.

2- ALL PARAMETERS EXCEPT A,B AND F FOR THE HIGH PRESSURE DISCHARGE (HP) SERIES MAY VARY BASED ON SIZE OF FAN(S) CHOSEN.

3- FOR MODELS ABOVE 1500 , PLEASE CONSULT OUR APPLICATION ENGINEERING DEPT.

DIMENSIONS

(SEMI VERTICAL)

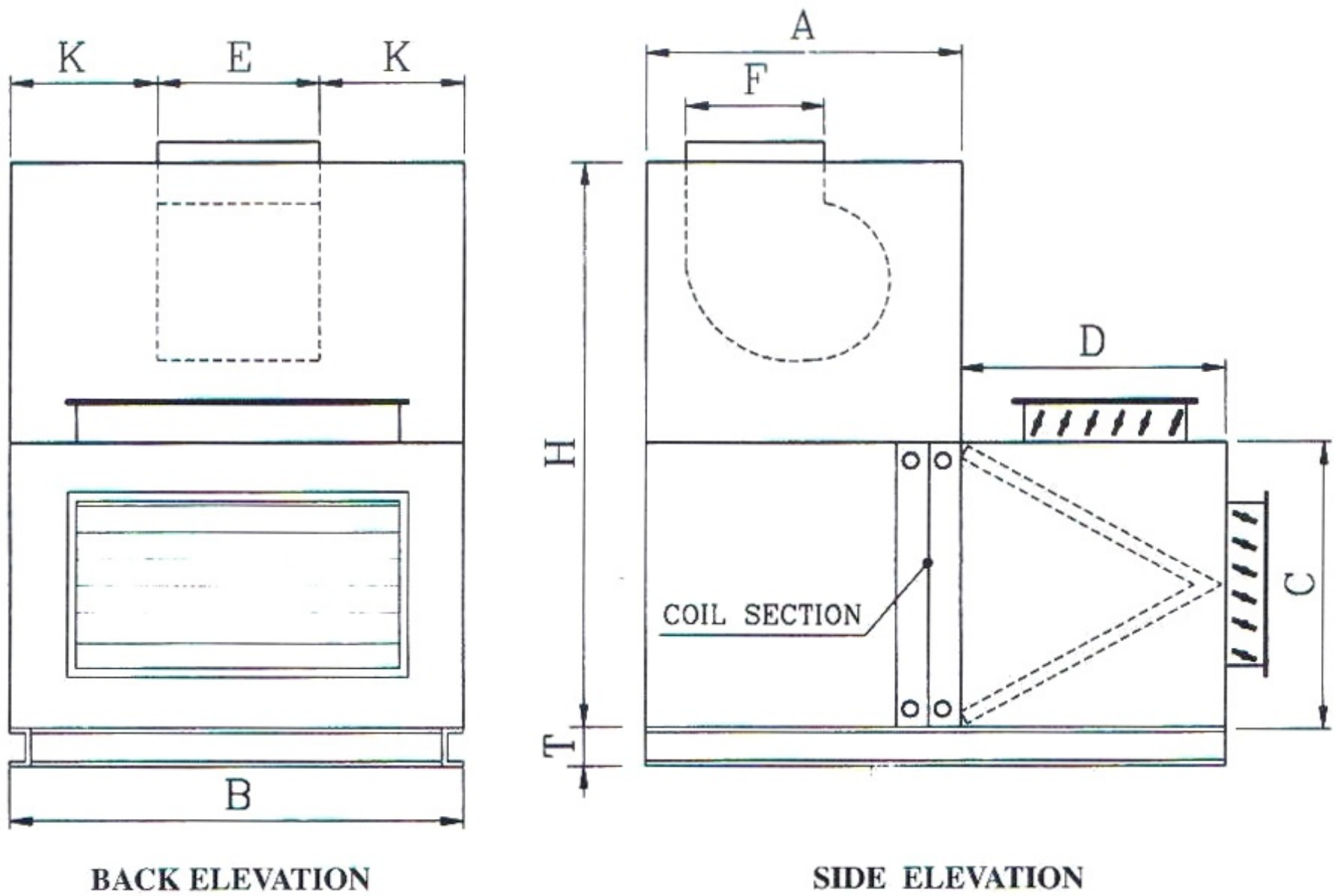

DIMENSIONS

MODEL	A	B	C	D	E	F	H	K	T
250	700	1110	850	620	475	470	1450	317	100
350	800	1110	1000	620	475	520	1650	317	100
500	850	1460	1000	750	500	570	1700	480	100
700	950	1460	1140	880	575	675	1890	442	100
1000	1100	1810	1140	1000	645	730	1990	582	100
1500	1300	2160	1520	1200	745	830	2470	707	120

NOTES:

1- ALL DIMENSIONS IN MM.

2- ALL PARAMETERS EXCEPT A,B AND F FOR THE HIGH PRESSURE DISCHARGE (HP) SERIES MAY VARY BASED ON SIZE OF FAN(S) CHOSEN.

3- FOR MODELS ABOVE 1500 . PLEASE CONSULT OUR APPLICATION ENGINEERING DEPT.

CHILLED WATER RATINGS

TABLE: 8

MODEL	NOMINAL CFM	EDB (°F)	EWB (°F)	8 FIN PER INCH.								
				4 ROW COIL			6 ROW COIL			8 ROW COIL		
				CAPACITY (MBH)	LVG. DB (°F)	LVG. WB (°F)	CAPACITY (MBH)	LVG. DB (°F)	LVG. WB (°F)	CAPACITY (MBH)	LVG. DB (°F)	LVG. WB (°F)
250	2500	80	67	86	60.0	56.2	108	55.0	53.0	122	52.0	50.8
		90	72	115	62.5	58.7	144	56.5	54.7	163	53.0	51.8
		100	75	135	66.2	60.2	169	59.0	55.6	190	54.6	52.5
350	3500	80	67	128	58.4	55.4	162	53.0	51.8	184	50.0	49.5
		90	72	171	61.2	57.7	217	55.0	53.0	245	51.0	50.0
		100	75	201	64.0	59.1	254	56.2	53.8	288	52.5	51.0
500	5000	80	67	171	60.0	56.3	216	55.0	53.0	244	52.0	50.8
		90	72	229	62.5	58.8	289	56.5	54.6	325	53.5	51.9
		100	75	268	66.2	60.3	339	59.0	55.5	383	54.2	52.2
700	7000	80	67	244	59.0	56.0	304	55.0	52.9	342	52.0	50.8
		90	72	327	62.0	58.5	407	56.4	54.5	458	53.3	51.7
		100	75	383	66.0	60.0	477	59.0	55.4	535	54.2	52.3
1000	10000	80	67	345	59.0	56.1	430	55.0	53.0	486	52.1	50.9
		90	72	462	62.0	58.7	576	56.5	54.7	650	53.5	51.9
		100	75	541	66.0	60.1	675	59.0	55.6	762	54.2	52.4
1500	15000	80	67	530	59.0	55.9	660	54.2	52.7	745	51.7	50.5
		90	72	710	62.0	58.3	884	56.2	54.2	995	53.0	51.4
		100	75	832	66.0	59.7	1036	58.2	55.1	1165	54.0	52.0
2200	22000	80	67	825	58.0	55.1	1025	53.0	51.7	1160	50.0	49.1
		90	72	1105	61.0	57.3	1375	55.0	53.0	1550	51.0	49.8
		100	75	1295	64.0	58.6	1605	56.2	53.5	1820	52.0	50.0
2500	25000	80	67	855	59.7	56.2	1065	55.1	53.2	1205	52.0	51.0
		90	72	1145	62.4	58.8	1425	57.0	54.9	1610	53.6	52.1
		100	75	1342	66.0	60.3	1670	59.2	55.9	1890	54.5	52.6
3000	30000	80	67	1034	59.7	56.2	1290	55.0	53.0	1460	52.0	50.9
		90	72	1385	62.4	58.7	1725	56.5	54.7	1950	53.5	51.9
		100	75	1623	66.0	60.2	2025	59.0	55.6	2290	54.5	52.3
4000	40000	80	67	1390	59.6	56.1	1730	55.0	53.0	1965	51.8	50.7
		90	72	1860	62.4	58.6	2315	56.5	54.6	2630	53.0	51.5
		100	75	2175	66.0	60.1	2715	59.0	55.5	3085	54.0	52.0

NOTES:

- -VALUES BASED ON ENTERING CHILLED WATER TEMPERATURE OF 45 °F
- -E.D.B = ENTERING AIR DRY BULB TEMPERATURE.
- -E.W.B = ENTERING AIR WET BULB TEMPERATURE.
- -LVG. = LEAVING AIR TEMPERATURE.
- -W.F.D. = WATER FLOW DATA.
- -P.D. = PRESSURE DROP.
- -MBH = 1000 BTU/HR

CHILLED WATER RATINGS

TABLE: 8(CONT.)

MODEL	NOMINAL CFM	EDB (°F)	EWB (°F)	14 FIN PER INCH.								
				4 ROW COIL			6 ROW COIL			8 ROW COIL		
				CAPACITY (MBH)	LVG. DB (°F)	LVG. WB (°F)	CAPACITY (MBH)	LVG. DB (°F)	LVG. WB (°F)	CAPACITY (MBH)	LVG. DB (°F)	LVG. WB (°F)
250	2500	80	67	113	54.0	52.0	142	47.8	47.3	161	44.0	43.9
		90	72	151	56.0	53.4	185	48.7	48.0	205	44.5	44.4
		100	75	178	57.0	54.0	214	49.1	48.5	233	45.0	44.9
350	3500	80	67	169	52.1	50.9	210	46.2	46.0	242	41.8	41.7
		90	72	225	53.5	52.0	270	46.9	46.6	303	42.5	42.4
		100	75	265	54.6	52.5	308	47.7	47.1	343	43.0	42.9
500	5000	80	67	225	53.9	52.1	285	47.6	47.1	322	44.0	44.0
		90	72	302	55.3	53.4	381	48.2	479	408	44.5	44.4
		100	75	354	57.0	54.0	427	49.0	48.4	465	45.0	45.0
700	7000	80	67	322	52.9	51.6	401	47.6	47.1	451	44.0	43.9
		90	72	431	55.0	53.0	524	48.0	47.7	570	44.5	44.4
		100	75	505	56.0	53.6	603	48.9	48.1	652	45.0	44.9
1000	10000	80	67	455	53.5	52.0	567	47.6	47.2	842	44.0	43.9
		90	72	609	55.1	53.2	746	48.1	47.8	818	44.5	44.4
		100	75	714	56.2	53.9	860	48.9	48.2	930	45.0	44.9
1500	15000	80	67	599	52.9	51.5	871	47.0	46.9	983	43.5	43.4
		90	72	937	54.2	52.6	1136	47.5	47.3	1245	44.0	43.9
		100	75	1098	55.2	53.2	1302	48.2	47.9	1410	44.5	44.4
2200	22000	80	67	1089	51.8	50.5	1333	45.8	45.7	1462	43.0	42.9
		90	72	1458	52.5	51.2	1700	46.7	46.5	1860	43.5	43.4
		100	75	1705	53.5	51.8	1948	47.6	47.0	2100	44.0	43.9
2500	25000	80	67	1128	53.9	52.0	1405	47.8	47.5	1590	44.3	44.2
		90	72	1511	55.2	53.8	1831	48.9	48.3	2035	44.8	44.7
		100	75	1771	57.0	54.1	2104	50.0	49.0	2310	45.3	45.2
3000	30000	80	67	1364	54.0	52.0	1702	47.7	47.3	1927	44.0	43.9
		90	72	1828	55.0	53.2	2217	48.8	48.0	2454	44.5	44.4
		100	75	2142	56.5	53.9	2563	49.2	48.5	2790	45.0	45.0
4000	40000	80	67	1834	53.4	51.8	2283	47.5	47.2	2593	43.9	43.8
		90	72	2455	55.0	53.0	2960	48.7	48.0	3271	44.5	44.4
		100	75	2871	56.2	53.8	3408	49.2	48.5	3723	45.0	45.0

NOTES:

-VALUES BASED ON ENTERING CHILLED WATER TEMPERATURE OF 45 °F
-E.D.B = ENTERING AIR DRY BULB TEMPERATURE.
-E.W.B = ENTERING AIR WET BULB TEMPERATURE.
-LVG. = LEAVING AIR TEMPERATURE.
-W.F.D. = WATER FLOW DATA.
-P.D. = PRESSURE DROP.
-MBH = 1000 BTU/HR

D.X COIL RATINGS

TABLE: 9

MODEL	NOMINAL CFM	EDB (°F)	EWB (°F)	8 FIN PER INCH.					
				4 ROW			6 ROW		
				TC (MBH)	LVG. DB (°F)	LVG. WB (°F)	TC (MBH)	LVG. DB (°F)	LVG. WB (°F)
250	2500	80	67	79	59.7	57.2	100	55.5	54.4
		85	70	92	61.7	59.2	115	57.7	56.0
		90	72	101	63.9	61.5	130	58.1	56.7
		95	75	112	66.3	63.1	145	59.7	58.4
350	3500	80	67	115	59.7	57.2	145	55.6	53.6
		85	70	133	61.5	58.8	170	56.9	55.1
		90	72	148	63.8	61.0	190	57.9	56.0
		95	75	164	66.4	62.5	215	59.6	57.7
500	5000	80	67	157	59.6	57.2	200	55.5	54.1
		85	70	186	61.6	59.2	235	56.8	55.7
		90	72	200	63.7	60.7	260	58.0	56.7
		95	75	227	66.4	62.6	295	59.6	58.6
700	7000	80	67	211	59.6	57.6	270	55.5	54.6
		85	70	250	61.7	59.5	315	56.9	56.2
		90	72	271	63.8	61.1	345	58.3	57.6
		95	75	302	66.2	63.6	390	60.0	59.6
1000	10000	80	67	317	59.6	57.1	405	55.4	54.0
		85	70	374	61.7	59.1	470	57.1	55.6
		90	72	405	63.8	60.5	520	58.0	56.7
		95	75	455	66.4	62.9	590	59.7	58.4
1500	15000	80	67	475	59.6	57.1	615	55.8	53.8
		85	70	560	61.6	59.0	720	57.1	55.3
		90	72	610	63.8	60.5	785	58.0	56.6
		95	75	680	66.4	62.9	890	59.5	58.4
2200	22000	80	67	700	59.6	57.1	910	55.7	53.7
		85	70	820	61.6	59.0	1010	57.9	56.0
		90	72	890	63.8	60.6	1150	58.0	56.7
		95	75	1000	66.4	62.9	1285	59.7	57.8
2500	25000	80	67	781	59.6	57.3	995	55.3	54.2
		85	70	920	61.7	59.2	1165	57.0	55.8
		90	72	996	64.0	60.7	1280	58.0	56.7
		95	75	1125	66.6	63.1	1450	59.7	58.9
3000	30000	80	67	913	59.9	57.6	1160	55.6	54.6
		85	70	1075	61.9	59.5	1365	56.8	56.2
		90	72	1165	64.1	61.0	1500	58.0	57.4
		95	75	1315	66.8	63.4	1700	59.6	59.3
4000	40000	80	67	1215	59.7	57.2	1540	55.8	54.7
		85	70	1425	62.0	59.7	1810	56.9	56.2
		90	72	1550	63.8	60.4	1990	57.9	57.4
		95	75	1745	66.6	63.5	2450	59.7	58.4

NOTES:

- VALUES BASED ON EVAPORTING TEMPERATURE OF 40 °F
- E.D.B = ENTERING AIR DRY BULB TEMPERATURE.
- E.W.B = ENTERING AIR WET BULB TEMPERATURE.
- LVG. = LEAVING AIR TEMPERATURE.
- T.C = TOTAL COOLING CAPACITY.
- MBH = 1000 BTU/HR

D.X COIL RATINGS

TABLE: 9 (CONT.)

MODEL	NOMINAL CFM	EDB (°F)	EWB (°F)	14 FIN PER INCH.					
				4 ROW			6 ROW		
				TC (MBH)	LVG. DB (°F)	LVG. WB (°F)	TC (MBH)	LVG. DB (°F)	LVG. WB (°F)
250	2500	80	67	91	59.2	55.3	116	53.3	51.5
		85	70	105	61.4	57.2	133	55.5	53.3
		90	72	116	63.3	58.4	148	56.8	53.9
		95	75	129	66.8	60.8	165	59.2	55.9
350	3500	80	67	132	58.0	54.7	168	53.1	51.0
		85	70	153	60.5	56.7	195	54.1	52.2
		90	72	170	62.1	57.6	216	55.8	53.0
		95	75	188	65.8	60.1	241	57.8	54.8
500	5000	80	67	180	59.4	55.5	230	53.4	51.5
		85	70	214	61.1	57.0	272	54.7	52.5
		90	72	230	63.5	58.5	294	57.0	54.0
		95	75	261	66.1	60.6	333	58.9	55.7
700	7000	80	67	243	59.9	55.9	310	54.8	52.4
		85	70	288	61.8	57.5	368	56.0	53.3
		90	72	312	64.3	59.0	398	59.1	55.5
		95	75	348	67.5	61.4	445	60.5	56.7
1000	10000	80	67	365	59.2	55.3	466	53.5	51.5
		85	70	430	61.2	57.0	547	54.7	52.5
		90	72	466	63.2	58.3	595	59.0	54.7
		95	75	524	66.1	60.5	670	58.7	55.5
1500	15000	80	67	547	59.2	55.3	700	53.5	51.5
		85	70	645	61.1	57.0	825	54.7	52.5
		90	72	702	63.2	58.3	900	56.3	53.6
		95	75	783	66.1	60.6	1010	58.4	55.4
2200	22000	80	67	806	59.2	55.3	1030	53.5	51.3
		85	70	944	61.1	57.0	1205	54.7	52.5
		90	72	1025	63.2	58.3	1310	56.4	53.7
		95	75	1152	66.1	60.5	1470	58.6	55.6
2500	25000	80	67	899	59.5	55.5	1146	53.8	51.7
		85	70	1059	61.6	57.2	1350	55.1	52.8
		90	72	1147	63.6	58.6	1465	57.1	54.1
		95	75	1296	66.4	60.7	1655	58.9	55.8
3000	30000	80	67	1050	59.9	55.8	1340	54.6	52.2
		85	70	1238	61.7	57.5	1578	55.6	53.3
		90	72	1342	64.2	59.0	1715	57.7	54.6
		95	75	1514	67.1	61.1	1938	59.3	56.3
4000	40000	80	67	1399	59.9	55.8	1784	54.6	52.2
		85	70	1641	61.7	57.5	2095	56.0	53.5
		90	72	1785	69.2	59.0	2275	57.7	54.7
		95	75	2010	57.2	61.2	2562	60.0	56.5

NOTES:

- -VALUES BASED ON EVAPORTING TEMPERATURE OF 40 °F
- -E.D.B = ENTERING AIR DRY BULB TEMPERATURE.
- -E.W.B = ENTERING AIR WET BULB TEMPERATURE.
- -LVG. = LEAVING AIR TEMPERATURE.
- -T.C = TOTAL COOLING CAPACITY.
- -MBH = 1000 BTU/HR

HOT WATER HEATING RATINGS

TABLE: 10

MODEL	NOMINAL CFM	EDB (°F)	8 FIN PER INCH.							
			1 ROW COIL		2 ROW COIL		3 ROW COIL		4 ROW COIL	
			CAPACITY (MBH)	LVG. DB (°F)	CAPACITY (MBH)	LVG. DB (°F)	CAPACITY (MBH)	LVG. DB (°F)	CAPACITY (MBH)	LVG. DB (°F)
250	2500	0	117	43	195	71.7	260	95.6	320	117.7
		20	102	57.5	165	80.7	220	101	280	123
		40	87	72	140	91.5	195	111.7	230	125
		60	70	85.7	115	102.3	170	122.5	210	137.2
350	3500	0	177	46.5	300	78.8	400	105.1	475	124.8
		20	154	60.5	260	88.3	335	108	410	127.7
		40	130	74.1	220	97.8	300	118.8	340	129.3
		60	105	87.6	180	107.3	260	128.3	310	141.5
500	5000	0	236	43.4	405	74.5	535	98.4	645	118.6
		20	206	57.9	350	84.4	450	102.8	555	122.1
		40	174	72.0	300	95.2	405	114.5	460	124.6
		60	140	85.7	245	105.0	350	124.4	420	137.2
700	7000	0	338	44.4	570	74.9	750	98.5	920	120.9
		20	294	58.6	495	85.0	635	103.4	795	124.5
		40	249	72.7	415	94.5	570	114.9	655	126.0
		60	200	86.3	340	104.6	490	124.4	600	138.0
1000	10000	0	473	43.5	815	75.0	1075	98.9	1305	120.0
		20	412	57.9	705	84.8	905	103.2	1130	124.0
		40	349	72.0	590	94.2	815	114.9	935	126.0
		60	280	85.7	485	104.6	700	124.0	850	138.0
1500	15000	0	745	45.7	1300	79.7	1705	104.5	2045	125.4
		20	647	59.6	1120	88.6	1440	108.3	1770	128.6
		40	549	73.6	940	97.6	1300	119.7	1460	129.6
		60	440	87.0	770	107.2	1110	128.0	1330	141.0
2200	22000	0	1010	42.2	1770	74.0	2460	102.8	2810	117.5
		20	875	56.5	1530	84.0	2070	106.5	2395	120.1
		40	735	70.7	1280	93.5	1870	118.2	1975	122.6
		60	600	85.0	1050	103.9	1600	126.9	1800	135.0
2500	25000	0	1185	43.6	2020	74.3	2615	96.2	3230	118.8
		20	1031	57.9	1750	84.4	2205	102.8	2795	122.8
		40	873	72.1	1470	94.0	1985	113.0	2305	124.8
		60	700	85.7	1200	104.1	1700	122.5	2100	137.0
3000	30000	0	1420	43.5	2460	75.4	3230	99.0	3910	119.9
		20	1235	57.8	2130	85.3	2720	103.4	3385	123.8
		40	1045	72.0	1785	94.7	2450	115.0	2790	125.5
		60	840	85.7	1460	104.7	2100	124.4	2540	137.9
4000	40000	0	2095	48.2	3560	81.8	4300	98.9	5300	121.9
		20	1825	61.9	3080	90.8	3630	103.5	4590	125.5
		40	1545	75.5	2580	99.3	3270	115.2	3790	127.2
		60	1240	85.5	2110	108.5	2800	124.4	3450	139.3

NOTES:

-HOT WATER ENTERING @ 180°F AND LEAVING @ 160 °F.

-E.D.B = ENTERING AIR DRY BULB TEMPERATURE.

-LVG. = LEAVING AIR TEMPERATURE.

-MBH = 1000 BTU/HR

HOT WATER HEATING RATINGS

TABLE: 10 (CONT.)

MODEL	NOMINAL CFM	EDB (°F)	14 FIN PER INCH.							
			1 ROW COIL		2 ROW COIL		3 ROW COIL		4 ROW COIL	
			CAPACITY (MBH)	LVG. DB (°F)	CAPACITY (MBH)	LVG. DB (°F)	CAPACITY (MBH)	LVG. DB (°F)	CAPACITY (MBH)	LVG. DB (°F)
250	2500	0	180	66.2	273	100.4	328	120.6	385	134.0
		20	157	77.7	231	105.0	286	125.2	320	137.7
		40	134	89.3	196	112.1	253	133.1	280	143.0
		60	108	99.7	161	119.2	221	141.3	250	150.9
350	3500	0	265	69.5	400	105.0	495	130.0	550	144.5
		20	227	79.6	350	112.0	435	134.3	495	150.0
		40	192	90.4	300	118.8	380	140.0	415	154.3
		60	160	102.0	240	123.0	330	146.7	375	158.5
500	5000	0	363	66.7	576	104.3	710	130.6	774	142.4
		20	317	78.3	490	110.1	620	134.0	696	148.0
		40	268	89.3	420	117.2	540	139.3	610	152.2
		60	215	99.5	343	123.1	455	143.7	525	156.6
700	7000	0	520	68.3	798	104.8	975	128.1	1100	144.5
		20	452	79.4	693	111.0	860	133.0	990	150.1
		40	383	90.3	581	116.3	745	138.0	880	155.6
		60	308	100.4	476	122.5	637	143.7	755	159.2
1000	10000	0	728	67.0	1140	104.9	1397	128.5	1576	145.0
		20	634	78.3	987	110.8	1230	133.0	1411	149.8
		40	537	89.4	826	116.0	1065	138.0	1262	156.0
		60	431	99.6	679	122.4	910	143.7	1095	160.7
1500	15000	0	1147	70.3	1720	105.5	2100	128.7	2860	144.7
		20	996	81.0	1500	111.9	1860	134.0	2146	151.6
		40	845	91.8	1260	117.2	1610	138.7	1930	158.3
		60	677	101.5	1020	122.5	1370	144.0	1681	163.1
2200	22000	0	1555	65.0	2480	103.6	3090	129.2	3477	145.4
		20	1347	76.3	2142	109.6	2700	133.0	3150	151.7
		40	1131	87.3	1792	114.9	2361	138.7	2827	158.2
		60	924	98.6	1470	121.5	2010	144.0	2486	164.0
2500	25000	0	1825	67.1	2830	104.0	3500	128.8	3980	146.4
		20	1587	78.4	2450	110.1	3066	132.8	3600	152.4
		40	1344	89.4	2058	115.7	2680	138.6	3200	157.7
		60	1078	99.7	1680	121.8	2260	143.1	2822	163.8
3000	30000	0	2187	67.0	3445	105.6	4200	128.8	4740	145.3
		20	1902	78.3	2982	111.4	3686	133.0	4268	150.9
		40	1610	89.3	2499	116.6	3185	137.6	3822	157.2
		60	1293	99.6	2044	122.7	2730	143.7	3376	163.5
4000	40000	0	3050	70.0	4585	105.4	5590	128.5	6308	145.0
		20	2650	80.9	4000	112.0	4920	133.1	5664	150.2
		40	2237	91.4	3350	117.0	4255	137.9	5100	157.3
		60	1795	101.2	2800	124.3	3640	143.7	4478	163.0

NOTES:

- HOT WATER ENTERING @ 180°F AND LEAVING @ 160 °F.
- E.D.B = ENTERING AIR DRY BULB TEMPERATURE.
- LVG. = LEAVING AIR TEMPERATURE.
- MBH = 1000 BTU/HR

STEAM HEATING RATINGS

TABLE: 11

MODEL	NOMINAL CFM	EDB (°F)	8 FIN PER INCH.				14 FIN PER INCH.			
			1 ROW COIL		2 ROW COIL		1 ROW COIL		2 ROW COIL	
			CAPACITY (MBH)	LVG. DB (°F)	CAPACITY (MBH)	LVG. DB (°F)	CAPACITY (MBH)	LVG. DB (°F)	CAPACITY (MBH)	LVG. DB (°F)
250	2500	-15	198	57.8	345	111.9	237	72.2	414	137.3
		10	177	75.1	310	124.0	212	88.0	372	146.9
		35	156	92.4	275	136.2	187	103.8	330	156.4
		60	136	110.0	240	148.3	163	120.0	288	166.0
350	3500	-15	293	62.0	524	122.7	351	77.2	628	150.0
		10	263	79.1	471	133.8	315	92.8	565	158.5
		35	231	95.7	418	144.8	277	107.8	501	166.7
		60	202	113.0	365	155.9	242	123.6	438	175.1
500	5000	-15	392	57.1	703	114.3	470	71.5	843	140.1
		10	351	74.5	633	126.4	421	87.4	760	149.8
		35	310	92.0	561	138.2	372	103.4	673	158.8
		60	270	109.6	490	150.1	324	119.6	588	168.1
700	7000	-15	545	56.6	976	113.2	645	71.0	1171	138.9
		10	488	74.1	878	125.3	585	86.9	1053	148.3
		35	430	91.5	780	137.5	516	102.8	936	158.0
		60	375	109.2	680	149.3	450	119.1	816	167.2
1000	10000	-15	778	56.6	1406	114.3	933	70.8	1687	140.1
		10	690	73.5	1266	126.4	828	86.1	1520	149.8
		35	613	91.4	1123	138.3	735	102.6	1347	158.9
		60	535	109.4	980	150.1	642	119.0	1176	168.1
1500	15000	-15	1170	56.7	2110	114.4	1404	71.1	2532	140.3
		10	1047	74.2	1899	126.4	1256	87.0	2279	149.7
		35	923	91.6	1684	138.2	1107	102.8	2020	158.9
		60	805	109.3	1470	150.1	966	119.2	1764	168.1
2200	22000	-15	1730	57.3	3100	114.6	2076	71.8	3720	140.5
		10	1548	74.7	2790	126.6	1857	87.6	3348	150.0
		35	1346	91.2	2475	138.5	1615	102.5	2970	159.2
		60	1190	109.7	2160	150.3	1428	119.7	2592	168.3
2500	25000	-15	1934	56.1	3510	114.1	2321	70.4	4228	140.6
		10	1730	73.6	3180	127.0	2076	86.4	3824	150.7
		35	1525	91.1	2845	139.7	1830	102.3	3384	159.5
		60	1330	109.0	2470	150.9	1596	118.7	2984	169.8
3000	30000	-15	2356	57.2	4217	114.3	2827	71.7	5068	140.4
		10	2107	74.6	3876	128.8	2528	87.5	4561	150.0
		35	1857	91.9	3438	140.0	2228	103.3	4125	161.5
		60	1620	109.6	3000	152.0	1944	119.6	3600	170.3
4000	40000	-15	3083	55.9	5642	114.7	3700	70.0	6890	143.4
		10	2758	73.4	5168	128.8	3310	86.1	6201	152.6
		35	2430	90.9	4584	140.4	2916	102.0	5500	161.5
		60	2120	108.7	4010	152.0	2544	118.5	4812	170.6

NOTES:

- VALUES RATIGS BASED ON STEAM PRESSURE OF 5 PSIG.
- E.D.B = ENTERING AIR DRY BULB TEMPERATURE.
- MBH = 1000 BTU/HR

FAN PERFORMANCE

TABLE: 12

MODEL	FAN SIZE	COIL FACE AREA FT^2	COIL FACE VEL. F.P.M	C.F.M.	TOTAL STATIC PRESSURE IN INCHES OF WATER											
					0.5"		0.75"		1"		1.25"		1.5"		2"	
					RPM	H.P.	RPM	H.P.	RPM	H.P.	RPM	H.P.	RPM	H.P.	RPM	H.P.
250LP	1x14"	5	400	2000	500	0.5	596	0.5	682	0.75	--	--	--	--	--	--
			450	2250	520	0.5	605	0.75	688	0.75	--	--	--	--	--	--
			500	2500	545	0.5	620	0.75	693	0.75	761	1	840	1.5	--	--
			550	2750	566	0.75	635	0.75	705	1	770	1.5	843	1.5	--	--
			600	3000	591	0.75	657	1	720	1	783	1.5	847	1.5	969	2
			700	3500	643	1	705	1.5	760	1.5	817	1.5	870	2	976	3
			800	4000	696	1.5	757	1.5	813	2	860	2	906	3	1000	3
350LP	1x16"	7.5	400	3000	477	0.75	545	0.75	615	1	685	1.5	755	1.5	886	2
			450	3375	502	0.75	566	1	625	1.5	688	1.5	750	1.5	875	3
			500	3750	530	1	590	1	645	1.5	700	1.5	765	2	868	3
			550	4125	550	1.5	615	1.5	665	1.5	716	2	766	2	868	3
			600	4500	600	1.5	640	1.5	690	2	740	2	785	3	875	3
			700	5250	--	--	689	2	745	3	790	3	830	3	940	3
			800	6000	--	--	--	--	805	4	846	4	880	4	950	4
500LP	1x17"	10	400	4000	450	1	510	1	565	1.5	625	1.5	685	2	795	3
			450	4500	473	1.5	534	1.5	586	1.5	635	2	686	2	790	3
			500	5000	530	1.5	560	1.5	604	2	650	3	695	3	790	4
			550	5500	536	1.5	585	2	630	3	675	3	715	3	795	4
			600	6000	--	--	615	2	658	3	720	4	716	4	810	4
			700	7000	--	--	670	3	714	4	750	4	788	5.5	850	5.5
			800	8000	--	--	--	--	770	5.5	810	5.5	840	5.5	905	5.5
700LP	1x19"	15	400	5600	410	1.5	469	1.5	525	2	538	3	642	3	752	4
			450	6300	432	1.5	486	2	537	3	587	3	639	3	744	4
			500	7000	--	--	507	3	554	3	599	3	645	4	738	5.5
			550	7700	--	--	528	3	574	4	615	4	657	4	740	5.5
			600	8400	--	--	551	4	595	4	636	4	674	5.5	750	5.5
			700	9800	--	--	--	--	640	5.5	677	5.5	715	7.5	783	7.5
			800	11200	--	--	--	--	--	--	722	7.5	755	10	879	10
1000LP	1x22"	20	400	8000	355	2	403	3	449	3	497	4	544	4	636	5.5
			450	9000	376	3	420	3	461	4	503	4	545	5.5	629	7.5
			500	10000	398	3	439	4	478	4	515	5.5	552	5.5	628	7.5
			550	11000	421	4	460	4	496	5.5	531	5.5	565	7.5	633	7.5
			600	12000	--	--	482	5.5	516	5.5	549	7.5	580	7.5	643	10
			700	14000	--	--	530	7.5	559	10	589	10	618	10	673	15
			800	16000	--	--	--	--	607	15	634	15	660	15	710	15
1500LP	1x26"	30	400	12000	334	3	369	4	402	5.5	434	5.5	467	7.5	535	7.5
			450	13500	358	4	390	5.5	421	5.5	450	7.5	479	7.5	536	10
			500	15000	--	--	414	5.5	442	7.5	469	7.5	495	10	547	10
			550	16500	--	--	438	7.5	465	10	490	10	515	10	562	15
			600	18000	--	--	--	7.5	489	10	512	15	536	15	580	15
			700	21000	--	--	--	--	539	15	560	20	528	20	622	20
2200LP	1x29"	45	400	18000	330	5.5	357	7.5	383	7.5	408	10	432	10	482	15
			450	20250	--	--	382	10	406	10	430	15	452	15	495	15
			500	22500	--	--	409	15	430	15	452	15	474	15	513	20
			550	24750	--	--	--	--	457	15	477	20	497	20	535	20
			600	27000	--	--	--	--	--	--	503	20	522	25	557	25
2500LP	2x22"	50	400	20000	398	2x3	439	2x4	478	2x4	515	2x5.5	552	2x5.5	628	2x7.5
			450	22500	422	2x4	466	2x5.5	501	2x2.5	535	2x5.5	569	2x7.5	635	2x7.5
			500	25000	--	--	493	2x7.5	526	2x7.5	559	2x7.5	589	2x7.5	650	2x10
			550	27500	--	--	528	2x7.5	553	2x7.5	584	2x10	613	2x10	668	2x15
			600	30000	--	--	--	--	583	2x10	611	2x10	638	2x15	691	2x15
			700	35000	--	--	--	--	--	--	670	2x15	694	2x15	741	2x20
3000LP	2x26"	60	400	24000	334	2x3	369	2x4	402	2x5.5	434	2x5.5	467	2x7.5	535	2x7.5
			450	27000	358	2x4	390	2x5.5	421	2x5.5	450	2x7.5	479	2x7.5	536	2x10
			500	30000	--	--	414	2x7.5	442	2x7.5	469	2x7.5	495	2x10	547	2x10
			550	33000	--	--	438	2x7.5	465	2x10	490	2x10	515	2x10	562	2x15
			600	36000	--	--	--	--	489	2x10	512	2x15	536	2x15	580	2x15
			700	42000	--	--	--	--	539	2x15	560	2x15	582	2x20	622	2x20
4000LP	2x29"	80	400	32000	305	2x5.5	336	2x5.5	363	2x7.5	391	2x7.5	419	2x10	475	2x10
			450	36000	330	2x5.5	357	2x7.5	383	2x7.5	408	2x10	432	2x10	482	2x15
			500	40000	--	--	380	2x10	403	2x10	427	2x15	450	2x15	494	2x15
			550	44000	--	--	403	2x10	425	2x15	448	2x15	469	2x15	510	2x15
			600	48000	--	--	--	--	448	2x15	469	2x20	490	2x20	528	2x20
			700	56000	--	--	--	--	--	--	515	2x25	533	2x25	567	2x25

NOTES:

SELECTIONS IN SHADED AREAS NOT RECOMMENDED FOR COOLING APPLICATIONS.

FAN PERFORMANCE

TABLE: 12 (CONT.)

MODEL	FAN SIZE	COIL FACE AREA sq. ft.	COIL FACE VEL. f.p.m.	C.F.M.	TOTAL STATIC PRESSURE IN INCHES OF WATER											
					2.5"		3"		3.5"		4"		5"		6"	
					RPM	H.P.	RPM	H.P.	RPM	H.P.	RPM	H.P.	RPM	H.P.	RPM	H.P.
250HP	1x13"	5.00	450	2250	1295	3.0	--	--	--	--	--	--	--	--	--	--
			500	2500	1284	3.0	1422	3.0	--	--	--	--	--	--	--	--
			550	2750	1275	3.0	1407	3.0	1532	4.0	--	--	--	--	--	--
			600	3000	1278	3.0	1398	3.0	1518	4.0	1631	5.5	--	--	--	--
			700	3500	1310	4.0	1410	4.0	1510	4.0	1613	5.5	--	--	--	--
			800	4000	1368	4.0	1455	5.5	1540	5.5	1630	5.5	--	--	--	--
350HP	1x14"	7.50	400	3000	1080	3.0	--	--	--	--	--	--	--	--	--	--
			450	3375	1085	3.0	1180	4.0	--	--	--	--	--	--	--	--
			500	3750	1090	4.0	1188	4.0	1275	5.5	--	--	--	--	--	--
			550	4125	1100	4.0	1192	5.5	1282	5.5	--	--	--	--	--	--
			600	4500	1120	4.0	1205	5.5	1287	5.5	1370	7.5	--	--	--	--
			700	5250	1180	5.5	1250	7.5	1320	7.5	1390	7.5	--	--	--	--
			800	6000	1250	7.5	1313	7.5	1378	10	1438	10	--	--	--	--
500HP	1x16"	10.00	400	4000	970	4.0	--	--	--	--	--	--	--	--	--	--
			450	4500	968	4.0	1062	5.5	1156	5.5	1240	7.5	--	--	--	--
			500	5000	976	4.0	1060	5.5	1145	5.5	1230	7.5	--	--	--	--
			550	5500	995	5.5	1070	5.5	1146	7.5	1223	7.5	1375	10	--	--
			600	6000	1021	5.5	1089	7.5	1157	7.5	1227	10	1369	10	--	--
			700	7000	1084	7.5	1144	10	1202	10	1260	10	1377	15	--	--
			800	8000	1156	10	1210	10	1264	15	1315	15	--	--	--	--
700HP	1x19"	14.00	400	5600	851	5.5	938	7.5	--	--	--	--	--	--	--	--
			450	6300	842	5.5	931	7.5	1010	10	--	--	--	--	--	--
			500	7000	832	7.5	921	7.5	1002	10	1078	10	--	--	--	--
			550	7700	825	7.5	911	7.5	993	10	1070	15	--	--	--	--
			600	8400	826	7.5	904	10	983	10	1059	15	1199	15	--	--
			700	9800	845	10	910	10	976	15	1044	15	1178	20	--	--
			800	11200	880	15	936	15	992	15	1050	15	1166	20	--	--
1000HP	1x22"	20.00	400	8000	719	7.5	--	--	--	--	--	--	--	--	--	--
			450	9000	710	7.5	785	10	--	--	--	--	--	--	--	--
			500	10000	703	10	777	10	846	15	--	--	--	--	--	--
			550	11000	701	10	770	15	838	15	902	15	--	--	--	--
			600	12000	705	10	768	15	831	15	894	20	--	--	--	--
			700	14000	726	15	779	15	833	20	886	20	995	25	1099	30
1500HP	1x26"	30.00	400	12000	605	10	--	--	--	--	--	--	--	--	--	--
			450	13500	597	15	659	15	719	15	--	--	--	--	--	--
			500	15000	600	15	654	15	710	20	765	20	--	--	--	--
			550	16500	609	15	657	20	706	20	756	20	856	30	--	--
			600	18000	624	20	667	20	710	20	755	25	853	30	--	--
			700	21000	660	25	698	25	735	25	775	30	848	35	925	40
2200HP	1x29"	45.00	400	18000	532	15	585	20	635	20	--	--	--	--	--	--
			450	20250	538	20	583	20	629	25	674	25	--	--	--	--
			500	22500	546	20	587	25	630	25	672	30	754	35	--	--
			550	24750	571	25	606	30	642	30	677	35	751	40	826	45
			600	27000	591	30	624	30	656	35	689	40	754	45	822	50
			700	31500	636	40	666	40	695	45	724	50	770	60	835	60
2500HP	2x22"	50.00	400	20000	703	2x10	777	2x10	846	2x15	--	--	--	--	--	--
			450	22500	702	2x10	770	2x15	836	2x15	900	2x15	--	--	--	--
			500	25000	709	2x15	770	2x15	830	2x15	891	2x20	--	--	--	--
			550	27500	722	2x15	776	2x15	832	2x20	887	2x20	996	2x25	--	--
			600	30000	741	2x15	791	2x20	840	2x20	890	2x20	992	2x25	1092	2x30
			700	35000	787	2x20	830	2x25	873	2x25	915	2x25	1000	2x30	1087	2x35
3000HP	2x26"	60.00	400	24000	605	2x10	--	--	--	--	--	--	--	--	--	--
			450	27000	597	2x15	659	2x15	719	2x15	--	--	--	--	--	--
			500	30000	600	2x15	655	2x15	710	2x20	765	2x20	--	--	--	--
			550	33000	609	2x15	657	2x15	706	2x20	756	2x20	856	2x30	--	--
			600	36000	625	2x20	667	2x20	710	2x20	755	2x25	848	2x30	--	--
			700	42000	660	2x25	698	2x25	735	2x25	772	2x30	849	2x35	925	2x40
4000HP	2x29"	80.00	400	32000	533	2x15	595	2x15	--	--	--	--	--	--	--	--
			450	36000	532	2x15	585	2x20	635	2x20	--	--	--	--	--	--
			500	40000	538	2x20	582	2x20	630	2x25	674	2x25	--	--	--	--
			550	44000	550	2x20	590	2x25	631	2x25	672	2x30	756	2x35	--	--
			600	48000	565	2x25	600	2x25	638	2x30	675	2x30	752	2x40	827	2x45
			700	56000	601	2x30	633	2x30	664	2x35	696	2x40	759	2x45	823	2x60

NOTES:

SELECTIONS IN SHADED AREAS NOT RECOMMENDED FOR COOLING APPLICATIONS.

MULTI-ZONE DIMENSIONS

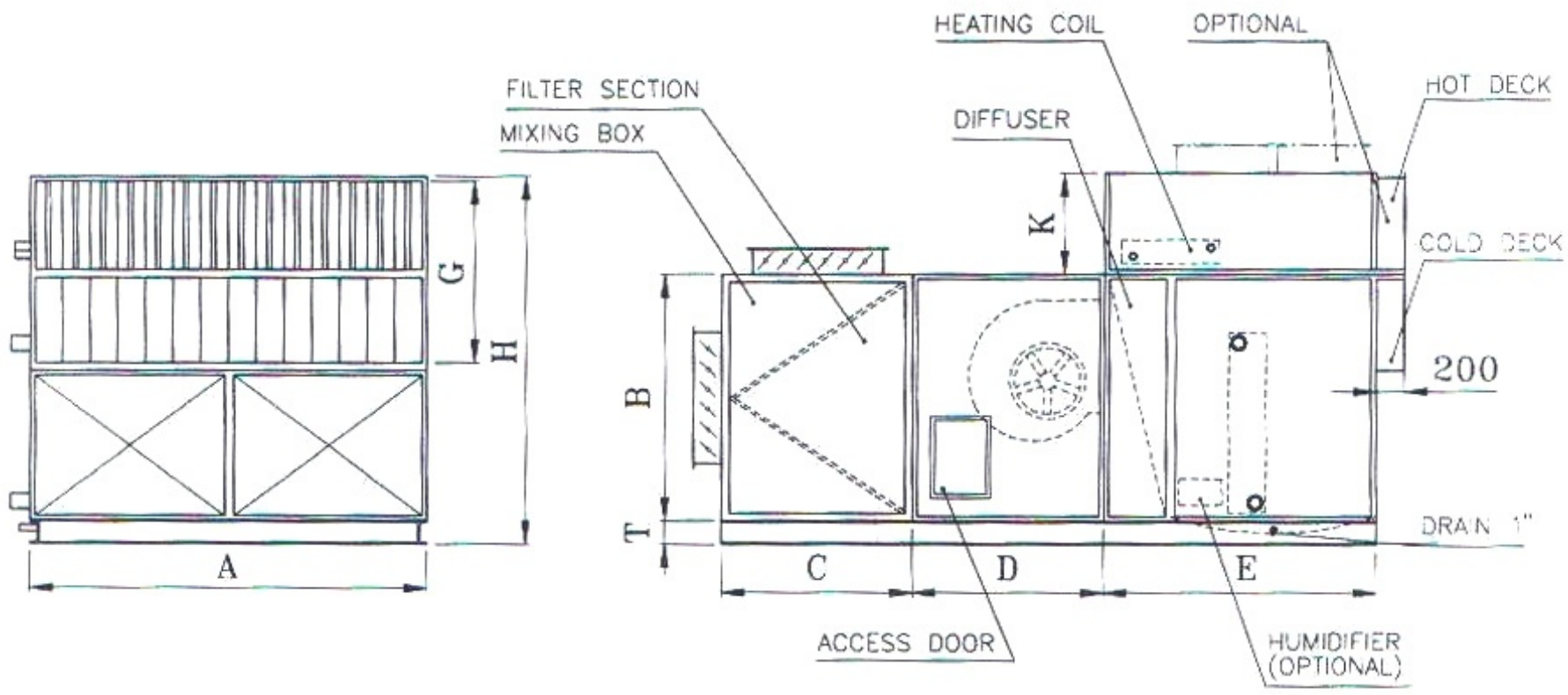

DIMENSIONS

MODEL	A	B	C	D	E	G	H	K	T
250	1200	850	620	900	1030	450	1200	250	100
350	1200	950	620	1000	1130	650	1400	350	100
500	1460	1000	750	1050	1300	850	1520	450	100
700	1650	1140	880	1200	1300	850	1710	450	100
1000	2000	1300	1000	1400	1500	1050	1970	550	100
1500	2350	1650	1200	1500	1700	1050	2320	550	120
2200	2700	1950	1300	1700	1800	1250	2740	650	120
2500	3250	1950	1000	1400	2100	1450	2840	750	120
3000	3800	1950	1200	1500	2200	1650	2940	850	140
4000	4600	2100	1300	1700	2300	1650	3090	850	140

NOTE:

ALL DIMENSIONS IN MM.

MULTI-ZONE HEATING COIL RATINGS

TABLE: 13

MODEL	NOMINAL CFM	E.D.B (°F)	8 FIN PER INCH							
			HOT WATER				STEAM			
			1 ROW		2 ROW		1 ROW		2 ROW	
			CAPACITY (MBH)	LVG. DB °F	CAPACITY (MBH)	LVG. DB °F	CAPACITY (MBH)	LVG. DB °F	CAPACITY (MBH)	LVG. DB °F
250	2500	0	100	36.9	167	61.5	160	59	291	107.3
		20	87	52	142	72.3	145	73.4	266	118
		40	75	67.6	120	84.2	132	80.7	242	129.2
		60	60	82.1	100	96.8	118	103.5	215	139.2
350	3500	0	139	36.6	236	62.1	218	57.4	400	105.3
		20	121	51.8	204	53.7	200	72.6	365	116.1
		40	102	66.8	173	85.5	180	87.4	333	127.7
		60	82	81.6	141	97.1	160	102.1	298	138.5
500	5000	0	200	36.8	344	63.4	314	57.9	576	106.1
		20	175	52.2	297	74.7	287	72.9	525	116.7
		40	148	67.3	255	87	261	88.1	478	128.1
		60	119	81.9	208	98.3	232	102.7	425	138.3
700	7000	0	253	33.3	427	56.2	387	51	711	93.6
		20	220	49	371	68.8	355	66.7	648	105.3
		40	186	64.5	311	80.9	321	82.2	592	118
		60	150	79.7	255	93.6	285	97.5	530	129.7
1000	10000	0	336	30.9	578	53.3	545	50.2	996	91.8
		20	292	46.9	500	66	496	65.7	907	103.6
		40	248	62.8	419	78.6	450	81.5	827	116.2
		60	199	78.3	344	91.7	402	97	736	127.8
1500	15000	0	496	30.5	866	53.2	804	49.4	1470	90.3
		20	431	46.5	746	65.8	732	65	1339	102.2
		40	365	62.4	626	78.5	664	80.8	1221	115
		60	293	78	513	91.5	593	96.4	1086	126.7
2200	22000	0	666	27.9	1168	48.9	1080	45.2	1974	82.7
		20	577	44.2	1010	62.3	983	61.2	1798	95.3
		40	485	60.3	845	75.4	891	77.3	1640	108.7
		60	396	76.6	593	84.8	796	93.3	1458	121
2500	25000	0	772	28.5	1317	48.5	1203	44.4	2209	81.4
		20	672	44.7	1141	62	1102	60.6	2015	94.3
		40	569	61	958	75.3	1000	76.8	1835	107.6
		60	456	76.8	782	88.8	890	92.8	1630	120
3000	30000	0	909	27.9	1574	48.3	1417	43.5	2601	79.9
		20	790	44.3	1363	61.9	1298	59.9	2373	92.9
		40	669	60.5	1142	75	1176	76.1	2162	106.4
		60	537	76.5	934	88.7	1045	92.1	1923	119
4000	40000	0	1403	32.3	2385	54.9	1967	45.3	3617	83.3
		20	1222	48.1	2063	67.5	1805	61.6	3300	96
		40	1053	63.8	1728	79.8	1635	77.7	3013	109.4
		60	831	79.1	1413	92.5	1450	93.4	2695	122.1

NOTES:

1-VALUES RATIGS BASED ON HOT WATER ENTERING @ 180 °F AND LEAVING @ 160 °F AND STEAM PRESSURE OF 5 PSI.

2-E.D.B = ENTERING AIR DRY BULB TEMPERATURE.

3-LVG. = LEAVING AIR TEMPERATURE.

4-MBH = 1000 BTU/HR

MULTI-ZONE HEATING COIL RATINGS

TABLE: 13 (CONT.)

MODEL	NOMINAL CFM	E.D.B (°F)	14 FIN PER INCH							
			HOT WATER				STEAM			
			1 ROW		2 ROW		1 ROW		2 ROW	
			CAPACITY (MBH)	LVG. DB °F	CAPACITY (MBH)	LVG. DB °F	CAPACITY (MBH)	LVG. DB °F	CAPACITY (MBH)	LVG. DB °F
250	2500	0	154	56.6	233	85.7	190	69.9	349	128.4
		20	134	69.3	198	92.8	174	84.0	319	137.4
		40	115	82.3	168	101.8	158	98.1	290	146.7
		60	92	93.8	140	111.5	141	111.9	258	154.9
350	3500	0	214	56.2	330	86.7	261	68.6	480	126.1
		20	186	68.9	285	94.9	240	83.0	438	135.1
		40	157	81.2	242	103.6	216	96.8	400	145.1
		60	126	93.1	197	111.8	192	110.4	357	153.8
500	5000	0	308	56.6	480	88.3	376	69.2	691	127.1
		20	269	69.5	415	96.3	344	83.3	630	135.9
		40	227	81.7	357	105.7	313	97.6	573	145.4
		60	183	93.6	290	113.3	278	111.1	510	153.8
700	7000	0	389	51.1	597	78.5	464	61.0	853	112.1
		20	338	64.4	519	88.2	426	76.0	777	122.1
		40	286	77.6	435	97.1	385	90.6	710	133.3
		60	231	90.3	357	106.9	342	105.0	636	143.6
1000	10000	0	517	47.5	809	74.4	654	60.1	1195	110.0
		20	450	60.1	700	84.4	595	74.7	1088	120.1
		40	380	75.0	586	93.7	540	89.7	992	131.2
		60	306	88.1	480	104.1	482	104.3	883	141.2
1500	15000	0	763	46.8	1212	74.3	964	59.1	1764	108.2
		20	663	60.6	1044	84.0	878	73.8	1605	118.4
		40	562	74.5	876	93.9	796	88.8	1465	129.8
		60	451	87.7	718	104.0	711	103.6	1303	139.9
2200	22000	0	1025	42.8	1635	68.4	1296	54.2	2368	99.0
		20	888	57.1	1414	79.1	1179	69.3	2157	110.2
		40	746	71.2	1183	89.5	1069	84.7	1968	122.3
		60	609	85.5	830	94.7	955	100.0	1749	133.1
2500	25000	0	1188	43.7	1843	67.8	1443	53.1	2650	97.5
		20	1034	58.0	1597	78.7	1322	68.6	2418	109.0
		40	876	72.2	1341	89.3	1200	84.1	2202	121.0
		60	702	85.8	1094	100.2	1068	99.3	1956	132.0
3000	30000	0	1400	43.0	2203	67.5	1700	52.1	3121	95.7
		20	1216	57.3	1908	78.5	1557	67.7	2847	107.3
		40	1030	71.6	1598	89.0	1411	83.2	2594	119.5
		60	826	85.3	1307	100.0	1254	98.4	2307	130.7
4000	40000	0	2100	48.3	3300	75.9	2360	54.2	4340	99.8
		20	1830	62.0	2840	85.3	2165	69.8	3960	111.0
		40	1520	75.0	2370	94.5	1860	82.7	3615	123.1
		60	1220	88.0	1940	104.6	1740	100.0	3230	134.3

NOTES:

1-VALUES RATIGS BASED ON HOT WATER ENTERING @ 180 °F AND LEAVING @ 160 °F AND STEAM PRESSURE OF 5 PSI.

2-E.D.B = ENTERING AIR DRY BULB TEMPERATURE.

3-LVG. = LEAVING AIR TEMPERATURE.

4-MBH = 1000 BTU/HR

DIMENSIONS

(COILS & FILTERS)

MODEL	NOMINAL CFM	COILS				FILTERS FACE AREA	
		NO.OF COIL x NO.OF CIRCUITS	FACE Hgt. MM	FACE Lgt. MM	FACE AREA (FT^2)	V TYPE (FT^2)	FLAT (FT^2)
250	2500	1x12	470	1050	5	8.5	5
350	3500	1x18	695	1050	7.5	12	7.5
500	5000	1x18	695	1400	10	17	10
700	7000	1x24	920	1400	14	23	14
1000	10000	1x28	1070	1750	20	33	20
1500	15000	2x18	1390	2100	30	50	30
2200	22000	2x22	1690	2450	45	73	45
2500	25000	4x18	1390	2x1750	50	2x33	2x25
3000	30000	4x18	1390	2x2100	60	2x50	2x30
4000	40000	4x22	1690	2x2450	80	2x73	2x40

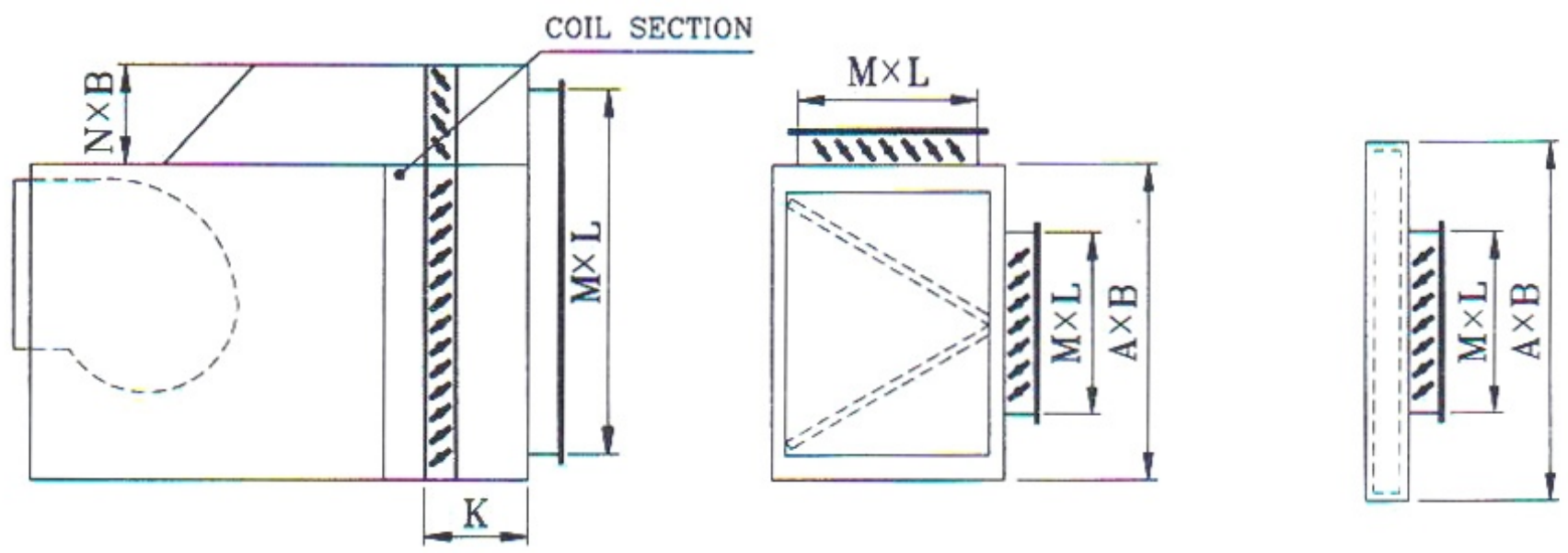

FACE & BY PASS DAMPERS — V TYPE FILTERS — FLAT FILTERS

DIMENSIONS

(DAMPERS)

MODEL	B	K	N	DAMPERS					
				WITH MIXING BOX		WITH OUT MIXING BOX		WITH FACE & BY PASS DAMPER	
				M	L	M	L	M	L
250	1110	350	150	400	900	530	900	650	900
350	1110	500	150	400	900	650	900	900	900
500	1460	500	280	530	1240	650	1240	900	1240
700	1460	500	280	650	1240	900	1240	1150	1240
1000	1810	600	400	780	1240	1150	1240	1530	1240
1500	2160	600	400	900	1840	1280	1640	1650	1640
2200	2510	600	400	900	2000	1280	1840	1650	1840
2500	3620	600	400	780	2x1240	1150	2x1240	1530	2x1240
3000	4320	600	400	900	2x1840	1280	2x1640	1650	2x1640
4000	5020	600	400	900	2x2000	1280	2x1840	1650	2x1840

WATER PRESSURE DROP IN TUBES [FEET WATER]

TABLE: 14

LENGTH (FT)	WATER VELOCITY FEET PER SEC. 1 ROWS											
	0.5	1	1.5	2	2.5	3	3.5	4	5	6	7	8
2	0.10	0.27	0.49	0.73	1.02	1.33	1.67	2.04	2.79	3.66	4.56	5.53
3	0.12	0.31	0.56	0.84	1.20	1.52	1.92	2.35	3.21	4.20	5.22	6.41
4	0.14	0.36	0.65	0.94	1.33	1.74	2.19	2.67	3.68	4.75	5.90	7.30
5	0.15	0.39	0.70	1.04	1.49	1.93	2.45	2.96	4.09	5.34	6.67	8.23
6	0.17	0.43	0.77	1.15	1.64	2.14	2.69	3.25	4.51	5.90	7.39	9.11
7	0.19	0.48	0.86	1.28	1.80	2.36	2.94	3.57	4.96	6.50	8.12	10.02
8	0.21	0.50	0.91	1.35	1.95	2.55	3.20	3.85	5.37	7.01	8.81	10.89
9	0.22	0.55	1.05	1.45	2.10	2.75	3.45	4.16	5.80	7.56	9.53	11.78
10	0.24	0.58	1.18	1.54	2.24	2.94	3.68	4.48	6.21	8.12	10.26	12.67

LENGTH (FT)	WATER VELOCITY FEET PER SEC. 2 ROWS DEEP											
	0.5	1	1.5	2	2.5	3	3.5	4	5	6	7	8
2	0.12	0.32	0.57	0.86	1.20	1.56	1.96	2.40	3.28	4.30	5.35	6.50
3	0.14	0.36	0.66	0.97	1.38	1.78	2.26	2.75	3.78	4.94	6.13	7.54
4	0.15	0.41	0.75	1.10	1.56	2.03	2.55	3.11	4.30	5.56	6.90	8.54
5	0.17	0.45	0.82	1.21	1.74	2.26	2.65	3.45	4.78	6.24	7.80	9.62
6	0.19	0.50	0.90	1.34	1.92	2.50	3.14	3.80	5.28	6.90	8.63	10.66
7	0.20	0.56	0.99	1.49	2.10	2.75	3.44	4.17	5.80	7.60	9.50	11.72
8	0.22	0.58	1.06	1.58	2.28	2.98	3.73	4.50	6.28	8.20	10.30	12.73
9	0.24	0.63	1.15	1.70	2.45	3.22	4.03	4.86	6.77	8.85	11.13	13.78
10	0.25	0.68	1.25	1.79	2.62	3.44	4.30	5.23	7.25	9.50	12.00	14.82

LENGTH (FT)	WATER VELOCITY FEET PER SEC. 3 ROWS											
	0.5	1	1.5	2	2.5	3	3.5	4	5	6	7	8
2	0.16	0.42	0.75	1.13	1.59	2.07	2.60	3.20	4.36	5.70	7.13	8.74
3	0.18	0.48	0.87	1.29	1.84	2.39	3.03	3.73	5.12	6.70	8.37	10.27
4	0.21	0.55	1.00	1.48	2.12	2.78	3.46	4.26	5.85	7.63	9.55	11.83
5	0.23	0.62	1.00	1.63	2.37	3.08	3.90	4.78	6.62	8.67	10.85	13.41
6	0.25	0.69	1.23	1.82	2.61	3.43	4.34	5.30	7.37	9.65	12.07	14.44
7	0.27	0.77	1.36	2.02	2.90	3.78	4.77	5.85	8.15	10.70	13.40	15.00
8	0.30	0.83	1.47	2.17	3.14	4.14	5.22	6.19	8.87	11.63	14.55	18.07
9	0.33	0.89	1.59	2.35	3.40	4.48	5.67	6.88	9.61	12.60	15.82	19.64
10	0.35	0.95	1.73	2.52	3.66	4.82	6.05	7.45	10.33	13.50	17.00	21.22

LENGTH (FT)	WATER VELOCITY FEET PER SEC. 4 ROWS DEEP											
	0.5	1	1.5	2	2.5	3	3.5	4	5	6	7	8
2	0.19	0.51	0.92	1.39	1.97	2.57	3.22	3.99	5.44	7.10	8.90	10.98
3	0.22	0.60	1.08	1.60	2.30	3.00	3.80	4.70	6.45	8.45	10.60	13.00
4	0.26	0.69	1.25	1.86	2.67	3.48	4.36	5.40	7.40	9.70	12.20	15.12
5	0.28	0.79	1.40	2.05	3.00	3.90	4.95	6.10	8.45	11.10	13.90	17.20
6	0.30	0.88	1.55	2.30	3.30	4.36	5.53	6.80	9.45	12.40	15.50	19.25
7	0.34	0.98	1.72	2.55	3.70	4.80	6.10	7.52	10.50	13.80	17.30	21.38
8	0.37	1.07	1.88	2.75	4.00	5.30	6.70	8.20	11.45	15.05	18.80	23.40
9	0.41	1.14	2.02	3.00	4.35	5.73	7.30	8.90	12.45	16.35	20.50	25.50
10	0.45	1.21	2.20	3.25	4.70	6.20	7.80	9.66	13.40	17.50	22.00	27.62

LENGTH (FT)	WATER VELOCITY FEET PER SEC. 6 ROWS DEEP											
	0.5	1	1.5	2	2.5	3	3.5	4	5	6	7	8
2	0.27	0.72	1.32	1.93	2.79	3.63	4.53	5.57	7.70	10.10	12.60	15.47
3	0.31	0.86	1.52	2.27	3.28	4.30	5.40	6.62	9.10	12.07	15.05	18.60
4	0.36	0.97	1.78	2.62	3.80	4.95	6.25	7.70	10.60	14.00	17.50	21.72
5	0.40	1.09	2.00	2.97	4.30	5.68	7.10	8.73	12.13	16.03	21.50	24.80
6	0.45	1.22	2.27	3.30	4.86	6.30	8.00	9.80	13.67	18.00	22.70	28.00
7	0.51	1.35	2.48	3.67	5.34	7.00	8.80	10.89	15.10	20.00	25.20	31.12
8	0.54	1.47	2.72	4.00	5.88	7.70	9.80	11.94	16.70	22.00	27.80	34.20
9	0.58	1.60	2.98	4.33	6.40	8.40	10.65	13.00	18.20	24.00	30.40	37.30
10	0.65	1.76	3.25	4.71	6.95	9.10	11.60	14.07	19.80	26.00	33.00	40.42

LENGTH (FT)	WATER VELOCITY FEET PER SEC. 8 ROWS DEEP											
	0.5	1	1.5	2	2.5	3	3.5	4	5	6	7	8
2	0.35	0.93	1.72	2.47	3.61	4.69	5.84	7.15	9.96	13.10	16.30	19.96
3	0.40	1.12	1.96	2.90	4.20	5.60	7.00	8.54	11.75	15.69	19.50	24.20
4	0.46	1.23	2.25	3.38	4.93	6.50	8.14	10.00	13.80	18.30	22.80	28.32
5	0.52	1.39	2.60	3.89	5.60	7.46	9.25	11.50	16.15	20.96	26.40	32.40
6	0.59	1.56	2.92	4.30	6.30	8.24	10.47	12.80	17.89	2360	29.90	36.75
7	0.68	1.72	3.24	4.79	6.98	9.20	11.50	14.26	19.70	26.20	33.10	40.86
8	0.71	1.87	3.56	5.25	7.76	10.10	12.90	15.68	21.95	28.95	36.80	45.00
9	0.78	2.06	3.94	5.66	8.45	11.07	13.95	17.10	23.95	31.65	40.30	49.10
10	0.85	2.31	4.30	6.17	9.20	12.00	15.40	18.48	26.20	34.50	44.00	53.22

CONNECTION SIZE

CHILLED & HOT WATER & STEAM COIL CONNECTION

TABLE: 15

MODEL	CHILLED WATER				HOT WATER				STEAM			
									SUPPLY		CONDENSE	
	2 ROW	4 ROW	6 ROW	8 ROW	1 ROW	2 ROW	3 ROW	4 ROW	1 ROW	2 ROW	1 ROW	2 ROW
250	1"	1 1/4"	1 1/4"	1 1/2"	1"	1"	1 1/4"	1 1/4"	1 1/2"	1 1/2"	1 1/4"	1 1/4"
350	1 1/4"	1 1/2"	1 1/2"	2"	1 1/4"	1 1/4"	1 1/2"	1 1/2"	1 1/2"	1 1/2"	1 1/4"	1 1/4"
500	1 1/2"	2"	2"	2"	1 1/4"	1 1/2"	1 1/2"	2"	2"	2"	1 1/2"	1 1/2"
700	1 1/2"	2"	2"	2 1/2"	1 1/2"	1 1/2"	2"	2"	2"	2"	1 1/2"	1 1/2"
1000	1 1/2"	2"	2 1/2"	2 1/2"	1 1/2"	1 1/2"	2"	2 1/2"	2"	2"	1 1/2"	1 1/2"
1500	2x1 1/2"	2x2"	2x2"	2x2 1/2"	2x1 1/2"	2x1 1/2"	2x2"	2x2"	2x2"	2x2"	2x1 1/2"	2x1 1/2"
2200	2x1 1/2"	2x2 1/2"	2x2 1/2"	2x2 1/2"	2x1 1/2"	2x1 1/2"	2x2"	2x2 1/2"	2x2"	2x2"	2x1 1/2"	2x1 1/2"
2500	4x1 1/2"	4x2 1/2"	4x2 1/2"	4x2 1/2"	4x1 1/2"	4x1 1/2"	4x2"	4x2 1/2"	4x2"	4x2"	4x1 1/2"	4x1 1/2"
3000	4x1 1/2"	4x2 1/2"	4x2 1/2"	4x2 1/2"	4x1 1/2"	4x1 1/2"	4x2"	4x2 1/2"	4x2"	4x2"	4x1 1/2"	4x1 1/2"
4000	4x1 1/2"	4x2 1/2"	4x2 1/2"	4x2 1/2"	4x1 1/2"	4x1 1/2"	4x2"	4x2 1/2"	4x2"	4x2"	4x1 1/2"	4x1 1/2"

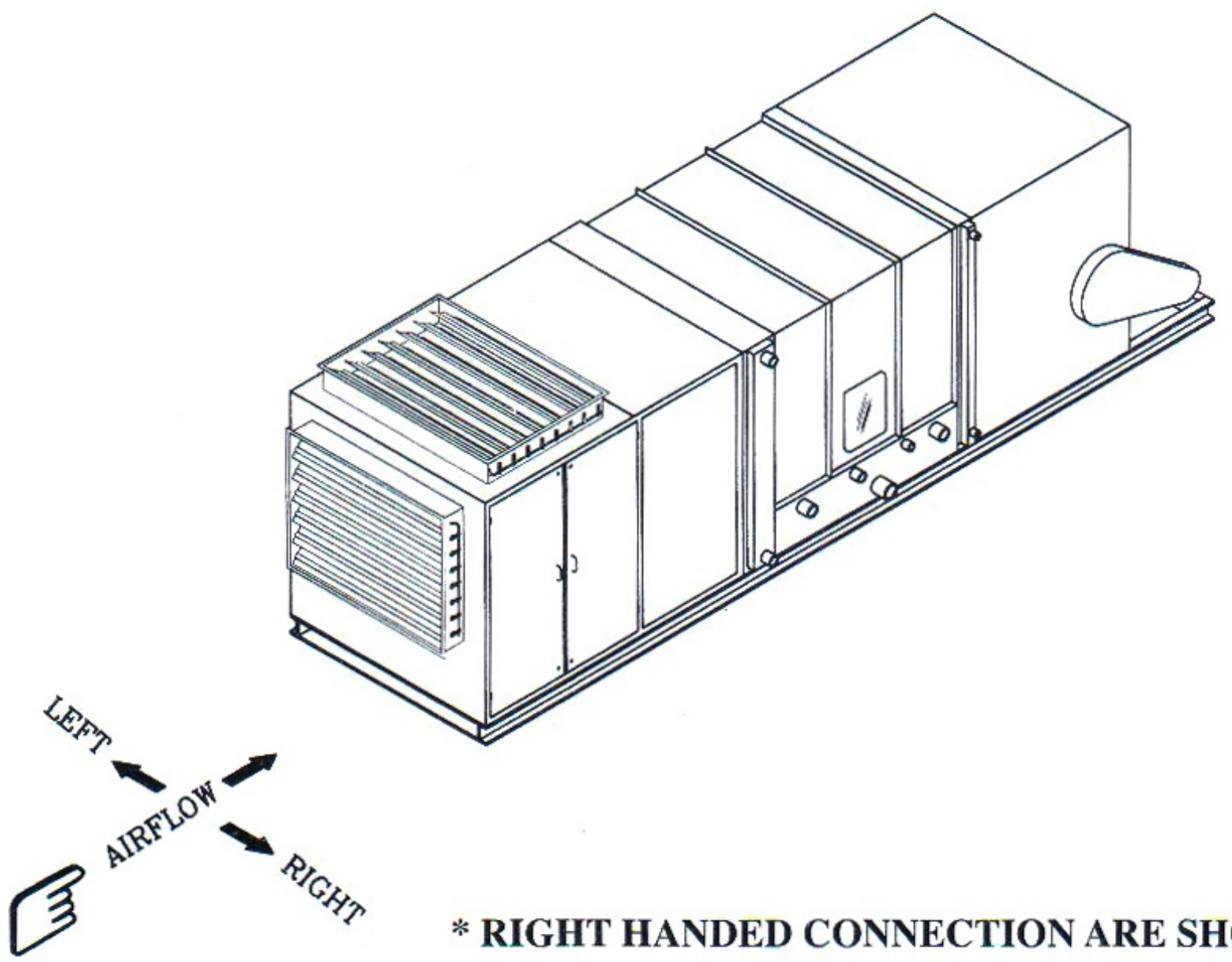

*** RIGHT HANDED CONNECTION ARE SHOWN**

AIR WASHER FEATURES

SABALAN AIR WASHERS ARE DESIGNED AND MANUFACTURED IN THREE BASIC CLASSES.

- **CLASS 4:**
- A COMPACT AND ECONOMICAL SINGLE SPRAY BANK AIR WASHER SPECIALLY DESIGNED FOR EFFECTIVE HUMIDIFYING AND AIR WASHING PURPOSES.

- **CLASS 6:**
- A SINGLE SPARY BANK UNIT FOR MEDIUM CAPACITY APPLICATIONS, THE IDEAL AIR WASHER FOR MOST TYPES OF EVAPORATIVE COOLING AND AIR WASHING TASKS.

- **CLASS 8:**
- A HIGHLY EFFICIENT HEAVY DUTY UNIT WITH TWO SPRAY BANKS USED WHENEVER. THE UTMOST IN HEAT TRANSFER, HUMIDIFICATION OR AIR CLEANING IS REQUIRED.

- CASINGS AND WATER BASINS ARE MADE OF GALVANIZED STEEL SHEETS. BASINS ARE 300 mm DEEP FOR CLASSES 4&6, AND 400 mm DEEP FOR CLASS 8

- MOISTURE ELIMINATORS ARE CONSTRUCTED FROM A SERIES OF CORROGATED GALVANIZED STEEL SHEETS INSTALLED SIDE BY SIDE IN CLOSE PROXIMITY OF EACH OTHER PREVENTING THE WATER DROPLETS FROM ENTERING THE FAN SECTION . THEY ALSO PRESENT A LARGE SURFACE AREA AGAINST WHICH WATER DROPLETS AND DUST PARTICLES FIRST IMPINGE BEFORE ENDING UP IN THE BASIN.

- CENTRIFUGAL SPRAY NOZZLES,CONTAIN NO CORES, VANES OR OBSTRUCTONS OF ANY KIND AND ALL INSIDE SURFACES ARE SMOOTH. NOZZLES HAVE REMOVABLE CAPS WHICH CAN BE TAKEN OFF FOR CLEANING PURPOSES.

- BRASS FLOODING NOZZLES ARE INSTALLED ON SEPARATE HEADERS EXTENDING ACROSS THE AIR WASHER. THEY DELIVER A SOLID FLAT STREAM OF WATER ONTO THE ELIMINATOR SURFACE IN ORDER TO WASH OFF THE DUST PARTICLES AND DEPOSITS.

- AN ACCESS DOOR WITH A GLASS INSPECTION WINDOW IS AVAILABLE ON ALL MODELS.

- MAKE-UP WATER CONNECTION AND AN AUTOMATIC FLOAT VALVE WHICH CONTROLS THE WATER LEVEL IN THE BASIN ARE PROVIDED.

- QUICK FILL CONNECTION TO WHICH THE FRESH WATER SUPPLY MAY BE CONNECTED IS FURNISHED FOR RAPID FILLING OF THE BASIN.

AIR WASHER SELECTION PROCEDURE

GIVEN:

ENTERING AIR D.B TEMPERATURE = 95°F
ENTERING AIR W.B TEMPERATURE = 63°F
SENSIBLE COOLING LOAD = 40.5 MBH
DESIGN AIR FLOW RATE = 15000 CFM
ROOM D.B. TEMPERATURE = 77°F
DETERMINE THE REQUIRED AIR WASHER MODEL,

$Q = 1.085 \times CFM \times (D.B._{ROOM} - D.B_{LVG.})$

$$D.B._{LVG.} = D.B._{ROOM} - \frac{Q}{1.085 \times CFM}$$

$$= 77 - \frac{40500}{1.085 \times 15000} = 74.5°F$$

THE CHOSEN AIR HANDLING UNIT IS A MODEL 1500.
EVAPORATIVE COOLING EFFICIENCY (E) IS DETERMINED AS ,

$$E = \frac{D.B._{ENT.} - D.B._{LVG.}}{D.B._{ENT.} - W.B._{ENT.}} = \frac{95 - 74.5}{95 - 63} = 0.64$$

THE COIL FACE AREA FOR MODEL 1500 IS 30 FT^2 THEREFORE,

$$F.V. = \frac{15000}{30} = 500 \text{ FPM}$$

AIR WASHER SELECTION PROCEDURE

WITH THE VALUES FOR (E) AND (F.V.) DETERMINED ABOVE , THE VALUE FOR (P.F) EQUALING 0.55 IS EXTRACTED FROM TABLES BELOW.
NOW , WITH THIS (P.F) VALUE AND THE AIR HANDLING UNIT MODEL IN MIND, A CLASS SIX AIR WASHER IS CHOSEN.
WE ALSO NOTICE THAT THE (P.F) VALUE GIVEN IS 0.571 THEREFORE , THE ACTUAL (E) VALUE IS 0.66 . THE LVG. AIR D.B. TEMPERATURE IS GIVEN AS,
D.B. LVG. = D.B. ENT. - E (D.B ENT. - W.B. ENT.) = 95- 0.660 x (95-63) = 73.9 F
THEREFORE , THE ACTUAL AIR WASHER COOLING CAPACITY IS GIVEN AS ,
Q = 1.085 x CFM (D.B. ROOM -D.B. LVG.) = 1.085 x (77-73.9) = 50.4 MBH
ENTERING THE PSYCHROMETRIC CHART WITH THE LEAVING AIR D.B. AND W.B TEMPERATURES OF 73.9°F AND 63°F RESPECTIVELY , THE RELATIVE HUMIDITY OF THE AIR IS DETERMINED TO BE 55%.
NOTE: ABRIVIATIONS ENT . AND LVG. DENOTE AIR ENTERING AND LEAVING AIR WASHER.

AIR WASHER PERFORMANCE FACTORS (P.F)

MODEL	250		350		500		700		1000		1500		2200		2500		3000		4000	
	C6	C8	C6	C8	C6	C8	C6	C8	C6	C8	C6	C8	C6	C8	C6	C8	C6	C8	C6	C8
P.F	0.525	0.815	0.525	0.815	0.548	0.821	0.548	0.821	0.548	0.821	0.571	0.854	0.571	0.854	0.585	0.877	0.585	0.877	0.595	0.891

EVAPORATIVE COOLING EFFICIENCY (E)
CLASS 6 & 8

P.F	0.50	0.55	0.60	0.65	0.70	0.75	0.80	0.85	0.90	0.95	100
E	0.60	0.64	0.68	0.72	0.76	0.80	0.84	0.88	0.92	0.95	100

EVAPORATIVE COOLING EFFICIENCY (E)
CLASS 4

AIR VELOCITY	450	475	500	525	550
E	0.594	0.572	0.555	0.536	0.519

AIR WASHER

CLASS 4

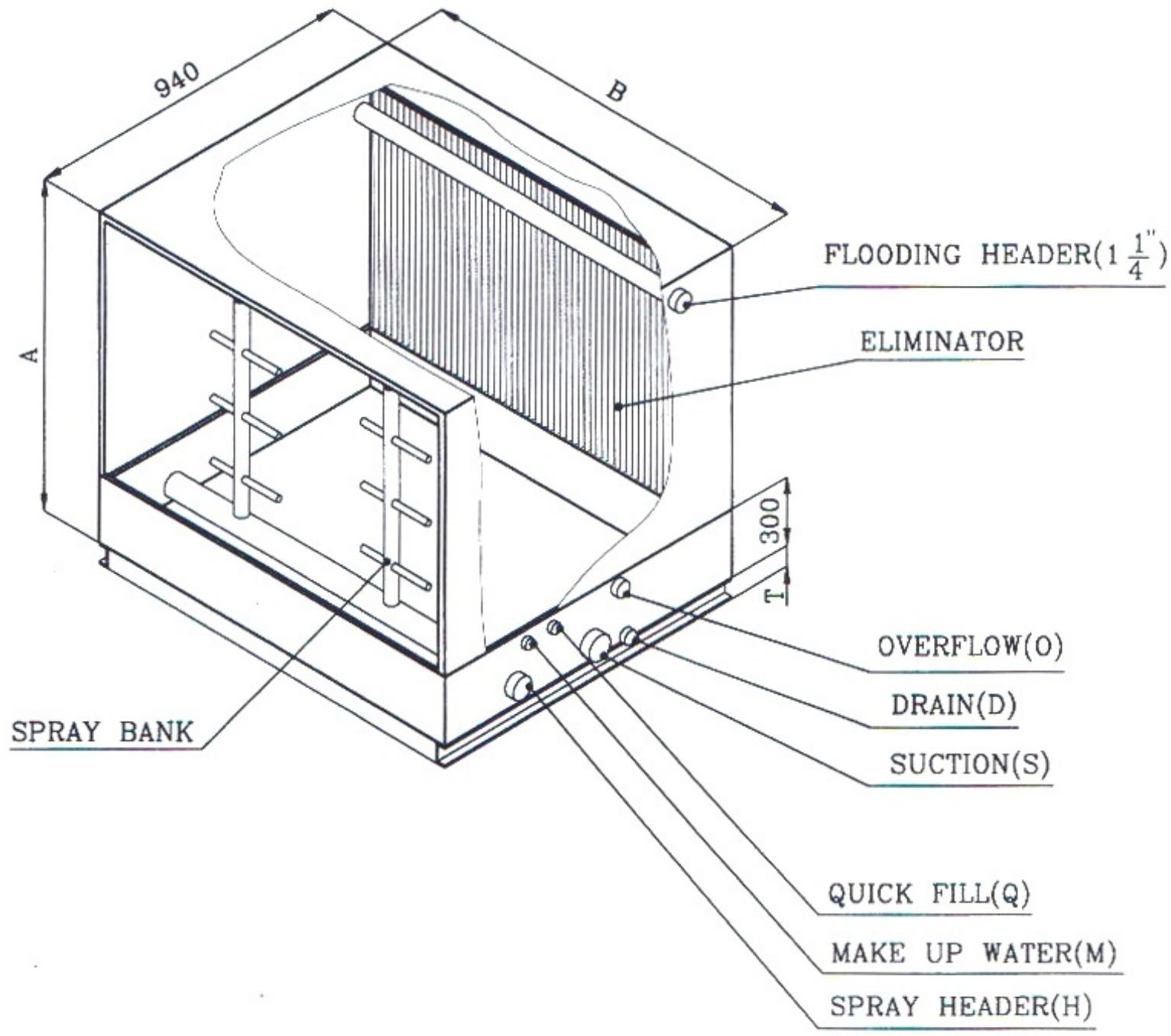

ENGINEERING DATA

MODEL	CFM NOM	FACE AREA [SQFT]	GPM	NOZZLE HEAD	PUMP HEAD	WEIGHT [kg]		DIMENSIONS [mm]			CONNECTIONS [inch]					
						NET	OPER.	A	B	T	D	O	S	H	M	Q
SRAW-4 250	2500	5	9	55	59	200	450	850	1110	100	1	1	1 1/4	1	3/4	3/4
SRAW-4 350	3500	7.5	14	55	60	250	500	1020	1110	100	1	1	1 1/2	1 1/4	3/4	3/4
SRAW-4 500	5000	10	20	55	60	300	650	1080	1460	100	1	1	1 1/2	1 1/4	3/4	3/4
SRAW-4 700	7000	14	28	55	61	350	700	1250	1460	100	1	1	2	1 1/2	3/4	3/4
SRAW-4 1000	10000	20	40	55	62	400	800	1400	1810	120	1	1	2	2	3/4	3/4
SRAW-4 1500	15000	30	60	55	63	500	1000	1780	2160	140	1	1	2 1/2	2	3/4	3/4
SRAW-4 2200	22000	45	90	55	64	600	1200	2080	2520	140	1	1	3	2 1/2	3/4	3/4
SRAW-4 2500	25000	50	100	55	62	750	1550	1780	3620	140	2x1	2x1	2x2	2x2	3/4	3/4
SRAW-4 3000	30000	60	120	55	63	950	2000	1780	4320	140	2x1	2x1	2x2 1/2	2x2	3/4	3/4
SRAW-4 4000	40000	80	160	55	64	1100	2300	2080	5020	140	2x1	2x1	2x3	2x2 1/2	3/4	3/4

NOTE:

1- NOZZLE HEAD AND PUMP HEAD IN FEET OF WATER.

2- ROUGHING IN DIMENSIONS AND SPECIFICATIONS

AIR WASHER

CLASS 6

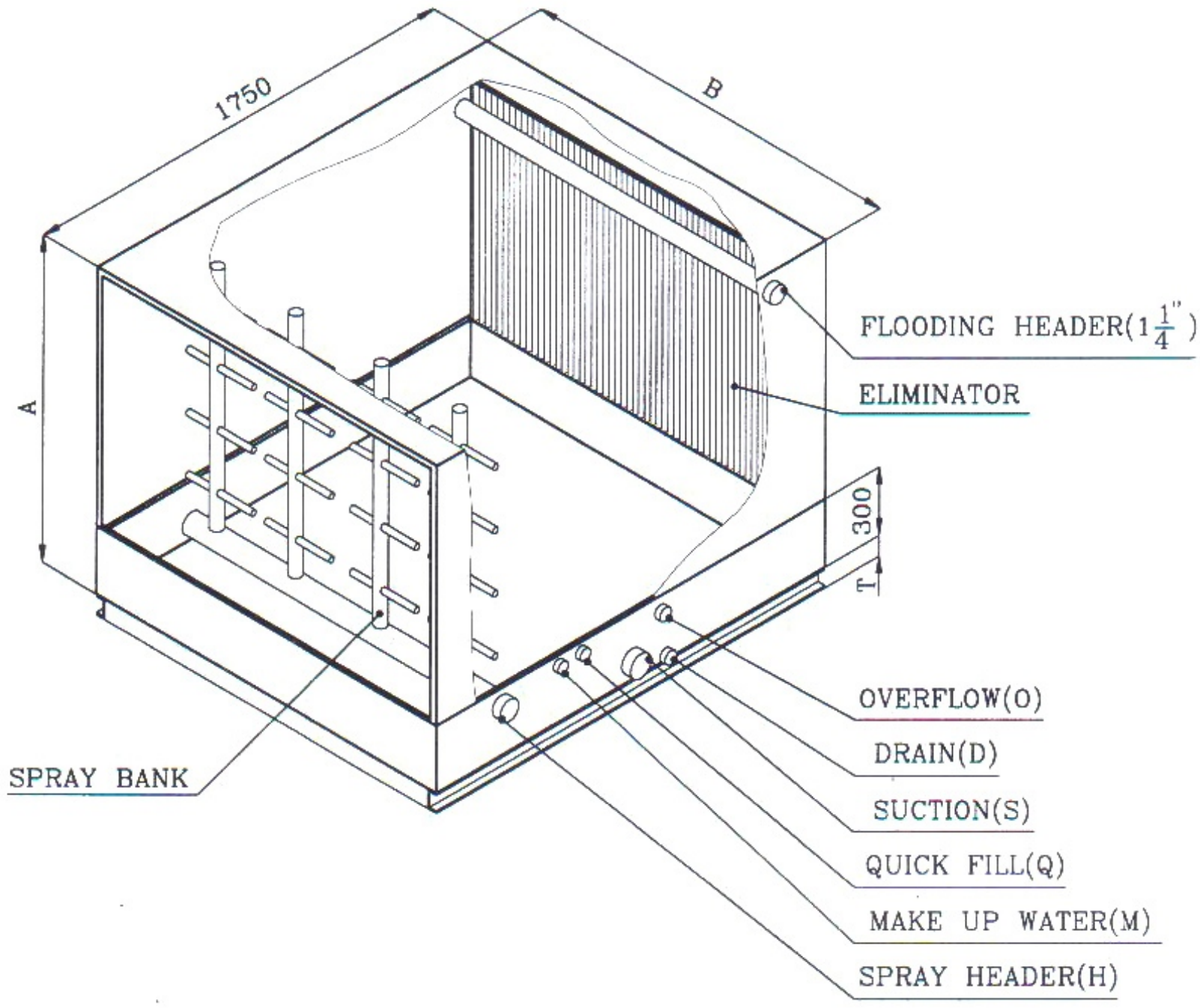

ENGINEERING DATA

MODEL	CFM NOM	FACE AREA [SQFT]	GPM	NOZZLE HEAD	PUMP HEAD	WEIGHT [kg]		DIMENSIONS [MM]			CONNECTIONS [inch]					
						NET	OPER.	A	B	T	D	O	S	H	M	Q
SRAW-6 250	2500	5	14	55	59	350	850	850	1110	100	1	1	2	$1\frac{1}{2}$	$\frac{3}{4}$	$\frac{3}{4}$
SRAW-6 350	3500	7.5	20	55	60	400	900	1020	1110	100	1	1	2	$1\frac{1}{2}$	$\frac{3}{4}$	$\frac{3}{4}$
SRAW-6 500	5000	10	26	55	60	450	1100	1080	1460	100	1	1	2	$1\frac{1}{2}$	$\frac{3}{4}$	1
SRAW-6 700	7000	14	38	55	61	500	1150	1250	1460	100	1	1	2	2	$\frac{3}{4}$	1
SRAW-6 1000	10000	20	52	55	62	600	1400	1400	1810	120	1	1	$2\frac{1}{2}$	2	1	1
SRAW-6 1500	15000	30	78	55	63	750	1700	1780	2160	140	$1\frac{1}{2}$	$1\frac{1}{2}$	3	$2\frac{1}{2}$	1	1
SRAW-6 2200	22000	45	100	55	64	900	2050	2080	2520	140	$1\frac{1}{2}$	$1\frac{1}{2}$	3	3	1	1
SRAW-6 2500	25000	50	120	55	62	1150	2700	1780	3620	140	$2x1\frac{1}{2}$	$2x1\frac{1}{2}$	$2x2\frac{1}{2}$	$2x2\frac{1}{2}$	1	1
SRAW-6 3000	30000	60	155	55	63	1400	3300	1780	4320	140	$2x1\frac{1}{2}$	$2x1\frac{1}{2}$	2x3	$2x2\frac{1}{2}$	1	1
SRAW-6 4000	40000	80	200	55	64	1700	4050	2080	5020	140	$2x1\frac{1}{2}$	$2x1\frac{1}{2}$	2x3	2x3	1	1

NOTE:

1- NOZZLE HEAD AND PUMP HEAD IN FEET OF WATER.

2- ROUGHING IN DIMENSIONS AND SPECIFICATIONS

AIR WASHER

CLASS 8

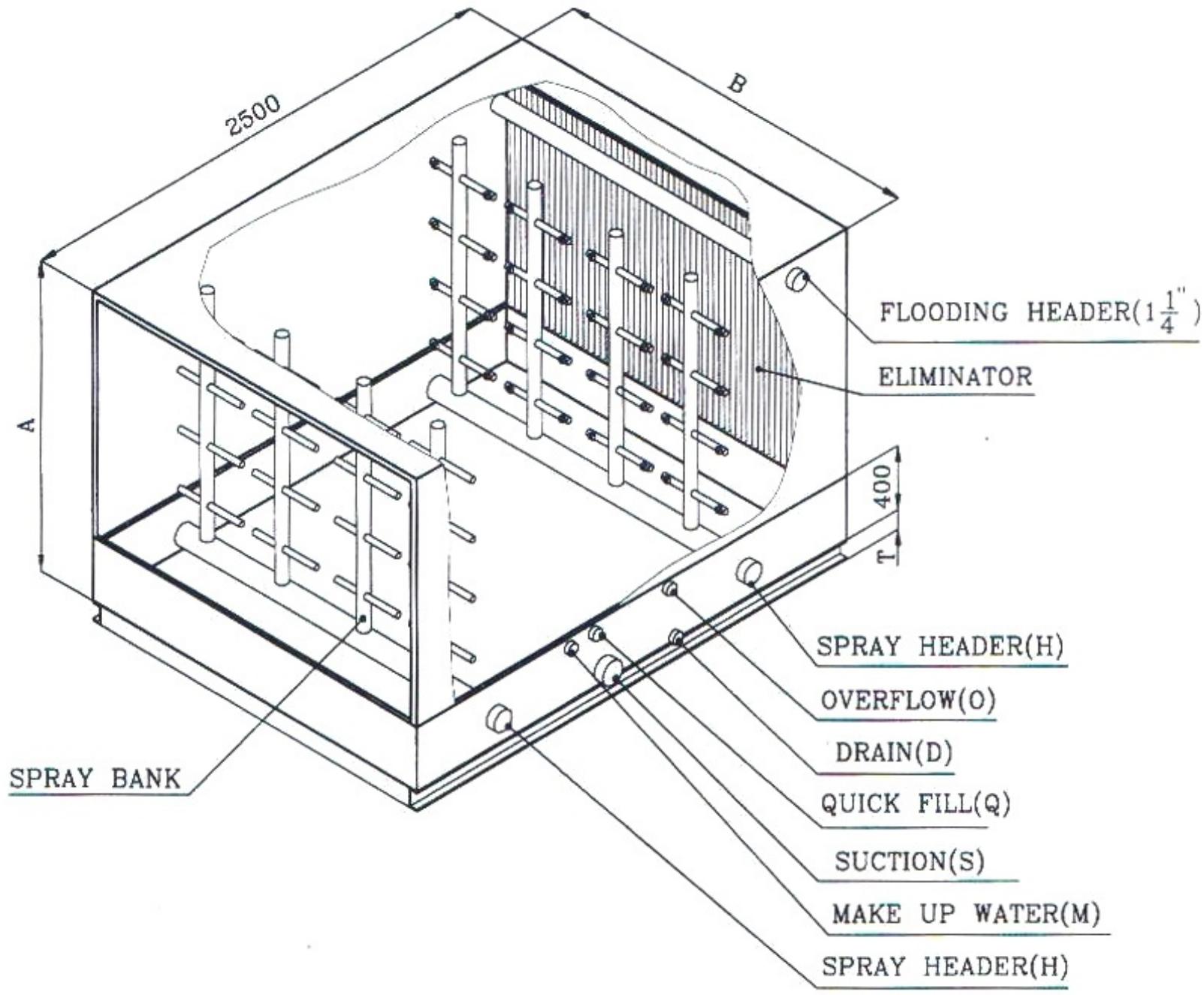

ENGINEERING DATA

MODEL	CFM NOM	FACE AREA [SQFT]	GPM	NOZZLE HEAD	PUMP HEAD	WEIGHT [kg]		DIMENSIONS [MM]			CONNECTIONS [inch]					
						NET	OPER.	A	B	T	D	O	S	H	M	Q
SRAW-8 250	2500	5	22	55	59	500	1400	900	1110	100	2	2	2	2x1	$\frac{3}{4}$	$\frac{3}{4}$
SRAW-8 350	3500	7.5	34	55	60	550	1450	1120	1110	100	2	2	2	2x$1\frac{1}{4}$	$\frac{3}{4}$	$\frac{3}{4}$
SRAW-8 500	5000	10	48	55	60	600	1900	1120	1460	100	2	2	$2\frac{1}{2}$	2x$1\frac{1}{2}$	$\frac{3}{4}$	1
SRAW-8 700	7000	14	64	55	61	700	2000	1350	1460	100	2	2	$2\frac{1}{2}$	2x2	$\frac{3}{4}$	1
SRAW-8 1000	10000	20	88	55	62	800	2400	1510	1810	120	2	2	3	2x2	1	1
SRAW-8 1500	15000	30	136	55	63	1000	2900	1880	2160	140	2	2	4	2x$2\frac{1}{2}$	1	1
SRAW-8 2200	22000	45	188	55	64	1200	3400	2180	2520	140	2	2	4	2x3	1	1
SRAW-8 2500	25000	50	224	55	62	1500	4700	1880	3620	140	2x2	2x2	2x3	4x$2\frac{1}{2}$	1	1
SRAW-8 3000	30000	60	270	55	63	1850	5650	1880	4320	140	2x2	2x2	2x4	4x$2\frac{1}{2}$	1	1
SRAW-8 4000	40000	80	370	55	64	2300	6700	2180	5020	140	2x2	2x2	2x4	4x3	1	1

NOTE:

1- NOZZLE HEAD AND PUMP HEAD IN FEET OF WATER.

2- ROUGHING IN DIMENSIONS AND SPECIFICATIONS

HUMIDIFIERS

SPRAY NOZZLE HUMIDIFIER

MODEL	NOIMINAL CFM	ABSORBED MOISTURE [LB/HR]		HEADER SIZE (INCH)
		ΔW=5	ΔW=10	
250	2500	9	15	1
350	3500	13	24	1
500	5000	16	32	1
700	7000	24	44	$1\frac{1}{4}$
1000	10000	40	72	$1\frac{1}{4}$
1500	15000	48	94	$1\frac{1}{2}$
2200	22000	69	135	2
2500	25000	81	145	$2x1\frac{1}{4}$
3000	30000	96	188	$2x1\frac{1}{2}$
4000	40000	138	270	2x2

ELECTRICAL PAN HUMIDIFIER

MODEL	NOIMINAL CFM	ABSORBED MOISTURE [LB/HR]	KW
250	2500	12	4
350	3500	18	6
500	5000	24	8
700	7000	31	10
1000	10000	49	16
1500	15000	61	20
2200	22000	104	35
2500	25000	98	32
3000	30000	122	40
4000	40000	208	70

NOTES:

-ΔW: MOISTURE DIFFERENCE BETWEEN AIR AFTER AND BEFORE HUMIDIFIER [GRAIN/LB(OF DRY AIR)].

-RATINGS BASED ON STEAM PRESSURE OF 25 PSIG.

-DRAIN SIZE = 0.5 INCH

STEAM HUMIDIFIER

MODEL	NOIMINAL CFM	STEAM CAPACITY [LB/HR]					
		ΔW=10	ΔW=20	ΔW=30	ΔW=40	ΔW=60	ΔW=80
250	2500	20	35	50	70	100	125
350	3500	25	50	75	100	150	195
500	5000	30	70	100	130	195	260
700	7000	40	95	130	180	270	360
1000	10000	60	130	180	260	390	505
1500	15000	85	195	275	380	580	775
2200	22000	125	295	410	575	870	1160
2500	25000	140	325	470	640	975	1285
3000	30000	170	390	550	770	1165	1545
4000	40000	220	520	730	1025	1545	2075

NOTES:

-ΔW: MOISTURE DIFFERENCE BETWEEN AIR AFTER AND BEFORE HUMIDIFIER [GRAIN/LB(OF DRY AIR)].

-STEAM HUMIDIFIER RATING AT 5 PSI PRESSURE.

-RATINGS BASED ON STEAM PRESSURE OF 5 PSIG.

SERVICE AREA REQUIREMENTS

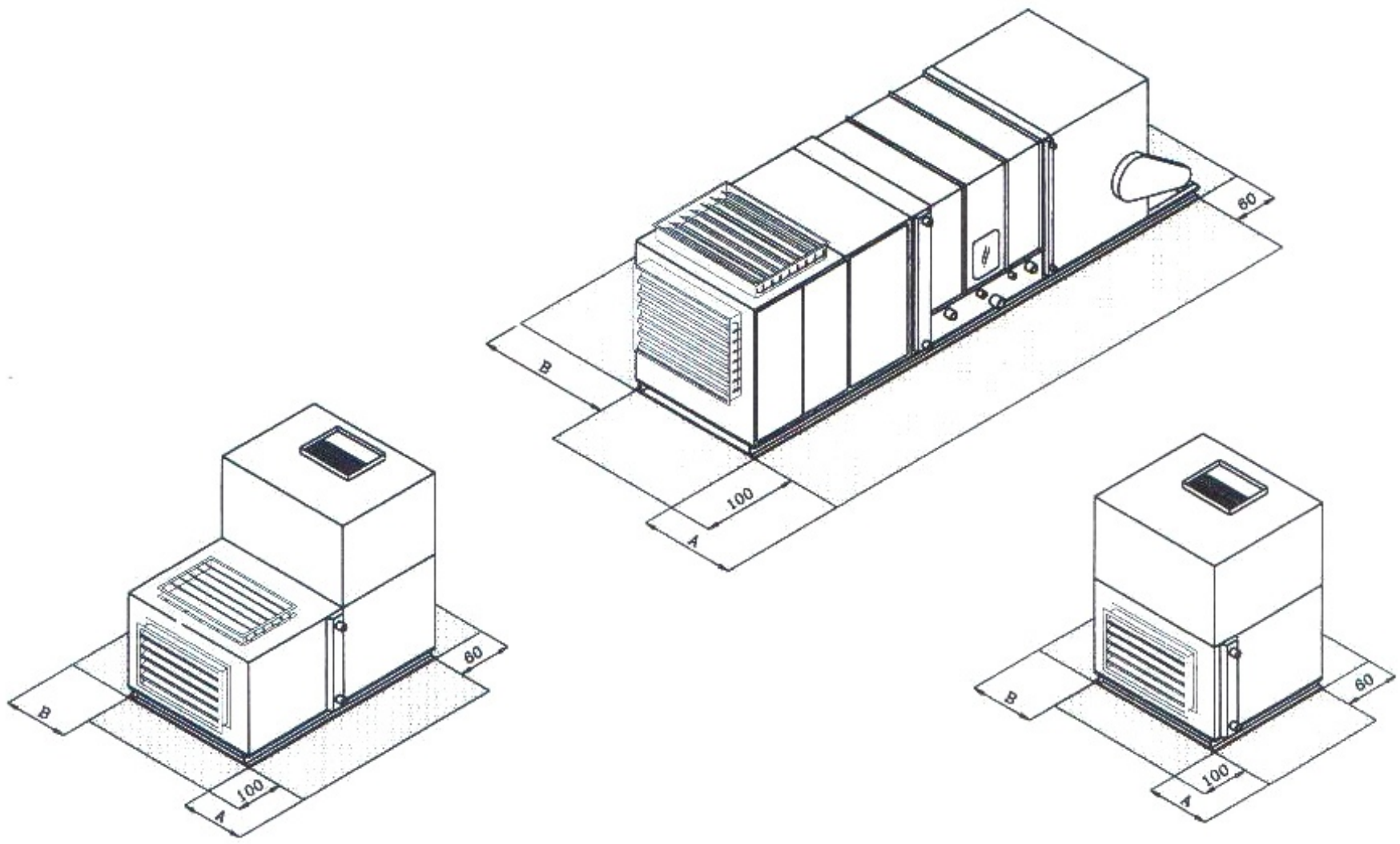

MODEL	250	350	500	700	1000	1500	2200	2500	3000	4000
A	100	100	100	100	100	100	100	220	250	290
B	150	150	180	180	220	250	290	220	250	290

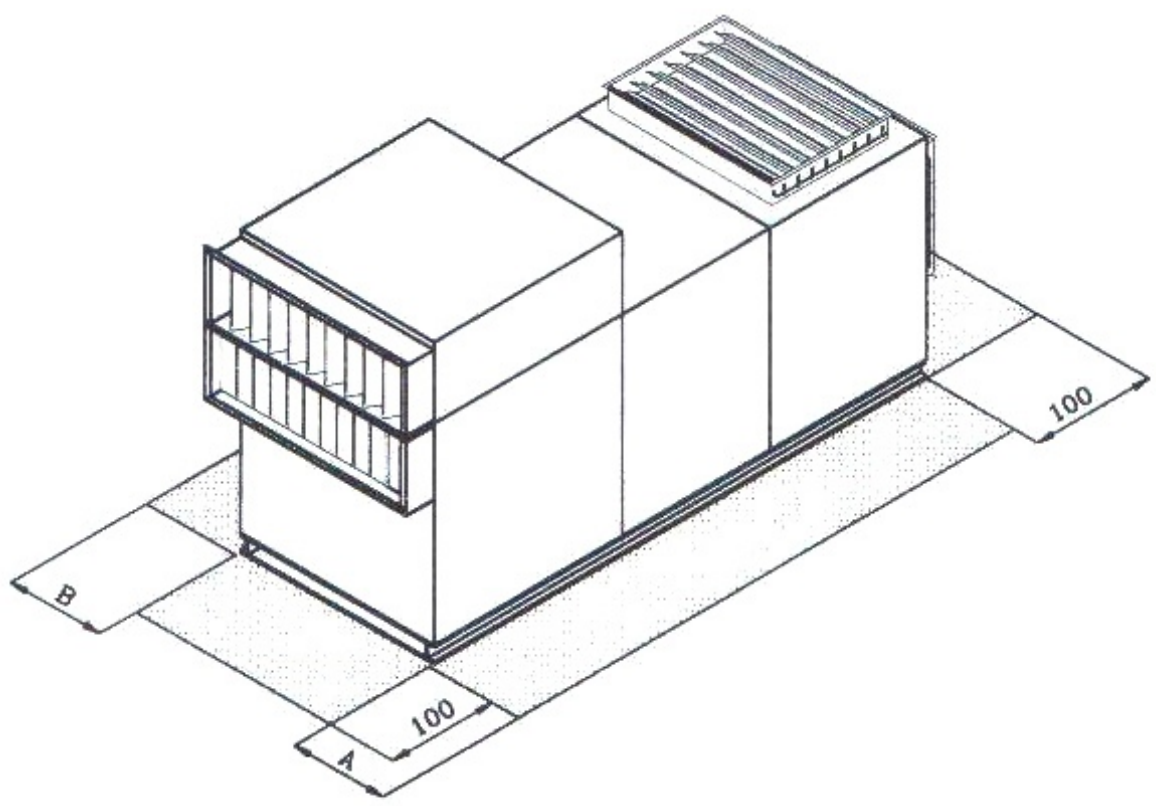

MODEL	250	350	500	700	1000	1500	2200	2500	3000	4000
A	100	100	100	100	100	100	100	195	220	260
B	150	150	150	180	200	260	300	195	220	260

NOTES:

1-ALL DIMENSIONS IN CM.

ENTHALPY / ALTITUDE

AIR WET BULB TEMP. °F	ALTITUDE (FT.)					
	0	1000	2000	3000	4000	5000
	ENTHALPY (BTU/LB)					
35	13.0	13.2	13.3	13.5	13.7	13.9
36	13.4	13.5	13.8	14.0	14.2	14.5
37	13.9	14.0	14.3	14.4	14.7	14.8
38	14.2	14.5	14.7	15.0	15.1	15.3
39	14.8	15.0	15.2	15.4	15.6	15.9
40	15.2	15.4	15.7	15.9	16.2	16.4
41	15.7	15.9	16.1	16.4	16.6	16.8
42	16.2	16.4	16.6	16.9	17.2	17.4
43	16.6	16.9	17.1	17.4	17.6	18.0
44	17.2	17.4	17.6	17.9	18.2	18.5
45	17.7	17.9	18.2	18.4	18.7	19.0
46	18.2	18.4	18.7	19.0	19.3	19.6
47	18.7	18.9	19.3	19.5	19.8	20.2
48	19.2	19.5	19.8	20.0	20.4	20.8
49	19.7	20.0	20.4	20.6	21.0	21.3
50	20.3	20.6	20.9	21.2	21.6	22.3
51	20.9	21.2	21.5	21.8	22.2	22.6
52	21.4	21.7	22.1	22.5	22.8	23.2
53	22.0	22.4	22.7	23.1	23.5	24.0
54	22.6	23.0	23.4	23.8	24.1	24.6
55	23.2	23.6	24.0	24.4	24.8	25.3
56	23.8	24.2	24.6	25.0	25.5	25.9
57	24.4	24.8	25.3	25.8	26.2	26.7
58	25.2	25.5	25.9	26.4	26.9	27.4
59	25.8	26.2	26.7	27.2	27.6	28.2
60	26.5	26.9	27.4	27.8	28.4	28.9
61	27.2	27.6	28.1	28.6	29.2	29.7
62	27.9	28.3	28.9	29.4	29.9	30.5
63	28.5	29.0	29.6	30.2	30.7	31.4
64	29.3	29.8	30.3	31.0	31.6	32.2
65	30.1	30.6	31.2	31.7	32.3	33.0
66	30.8	31.4	32.0	32.6	33.3	33.9
67	31.6	32.2	32.8	33.5	34.1	34.8
68	32.4	33.0	33.7	34.3	35.0	35.8
69	33.2	33.9	34.5	35.3	35.9	36.7
70	34.0	34.7	35.4	36.1	36.9	37.6
71	34.9	35.6	36.3	37.0	37.9	38.6
72	35.8	36.5	37.3	38.0	38.8	39.7
73	36.7	37.5	38.2	39.0	39.9	40.7
74	37.6	38.4	39.2	40.0	40.9	41.8
75	38.6	39.4	40.2	41.0	42.0	42.9
76	39.6	40.3	41.2	42.1	43.0	44.0
77	40.6	41.4	42.3	43.2	44.2	45.2
78	41.5	42.5	43.4	44.3	45.3	46.4
79	42.6	43.5	44.5	45.5	46.5	47.5
80	43.7	44.6	45.6	46.6	47.6	48.8
81	44.8	45.8	46.7	47.8	48.8	50.0
82	45.9	46.9	48.0	49.0	50.3	51.4
83	47.0	48.1	49.2	50.3	51.5	52.8
84	48.2	49.3	50.4	51.6	52.9	54.2
85	49.4	50.3	51.7	53.0	54.2	55.6